Parts Manual

nitro gro

PARTS MANUAL

MODEL 6026

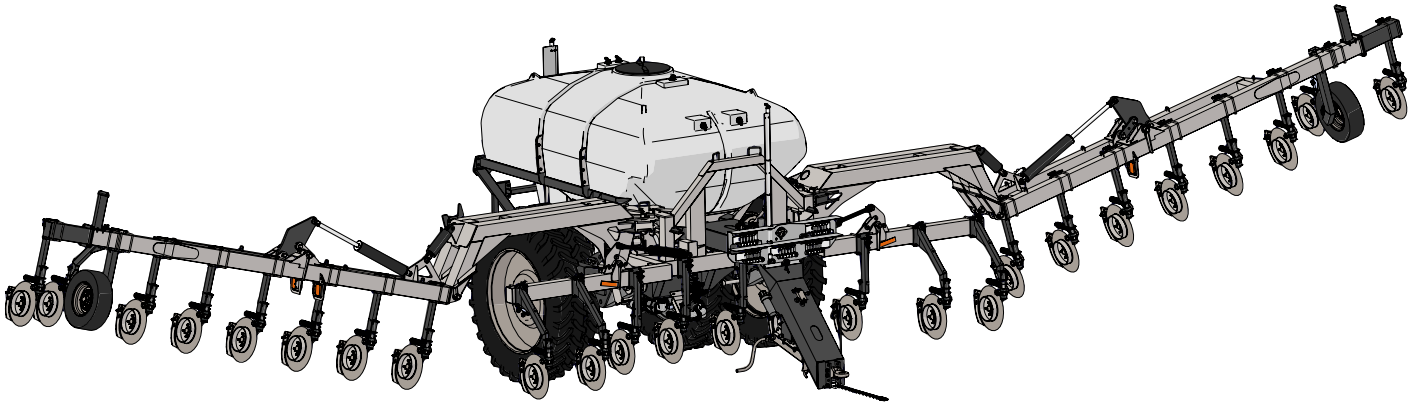

Rev. 8.1.2022

J&M Manufacturing Co, Inc
284 Railroad Street - P.O. Box 547 | Fort Recovery, OH 45846 | Ph: (419) 375-2376 | Fax: (419) 375-2708
www.jm-inc.com

Table Of Contents

Decals 4
Hitch 6
Jack Assembly 6
Wing Rest. 6
Hub and Spindle Assembly 7
Gauge Wheel Assembly 8
Toolbar 9
Inside Wing and Connections. 10
Middle Wing and Connections. 12
Outside Wing and Connections 13
Wing End and Wing Prop 14
Walking Dual Wheel Assembly. 15
Tank Supports 16
Tank Strap Down. 17
Tank 18
Hydraulic 155 ACE Pump and Manifold 19
Hydraulic 750 ACE Pump and Manifold 20
Raven Manifold 21
Parallel Linkage for Toolbar Height Adjustment 22
Hand Wash Tank 23
Check Valve. 23
Slow Moving Vehicle Sign 23
Coulter Mounts 24
Coulter Blade and Hub Assembly 24
GEP Coulter Assembly. 25
GEP Coulter Knife Assembly 26
Coulter Injector Assembly 26
J&M Para-Linkage Coulter 27
J&M Para-Linkage Coulter Rod Assembly. 27
J&M Para-Linkage Row Closers 28
Flow Monitor 29
Flow Monitor Mount and Sight Glasses 30
Hydraulic Pump Circuit Hydraulic Schematic 32
Main Wing Fold Circuit Hydraulic Schematic 33
Wing Flip Circuit Hydraulic Schematic 34
Wing Flip Circuit Hydraulic Schematic 35
Down Pressure Circuit Hydraulic Schematic 36
Down Pressure Circuit Hydraulic Schematic 37
Fertilizer Hose Routing 38
Raven SCS 450 Liquid Control System. 40
ISO Liquid Control System. 41
Lights and Wiring 42

When performing maintenance work, wear sturdy, rough-soled work shoes and protective equipment for eyes, hair, hands, hearing and head. Follow the Operator's Manual instructions to ensure safe and proper maintenance and repair.

Your local, authorized dealer can supply genuine replacement parts. Substitute parts may not meet original equipment specifications and may be dangerous.

⚠ **WARNING**

MAKE SURE ALL POWER IS SHUT OFF BEFORE PERFORMING ANY MAINTENANCE OR REPAIR WORK.

Decals

⚠ATTENTION! BECOME ALERT! YOUR SAFETY IS INVOLVED!⚠

Replace Immediately If Damaged or Missing

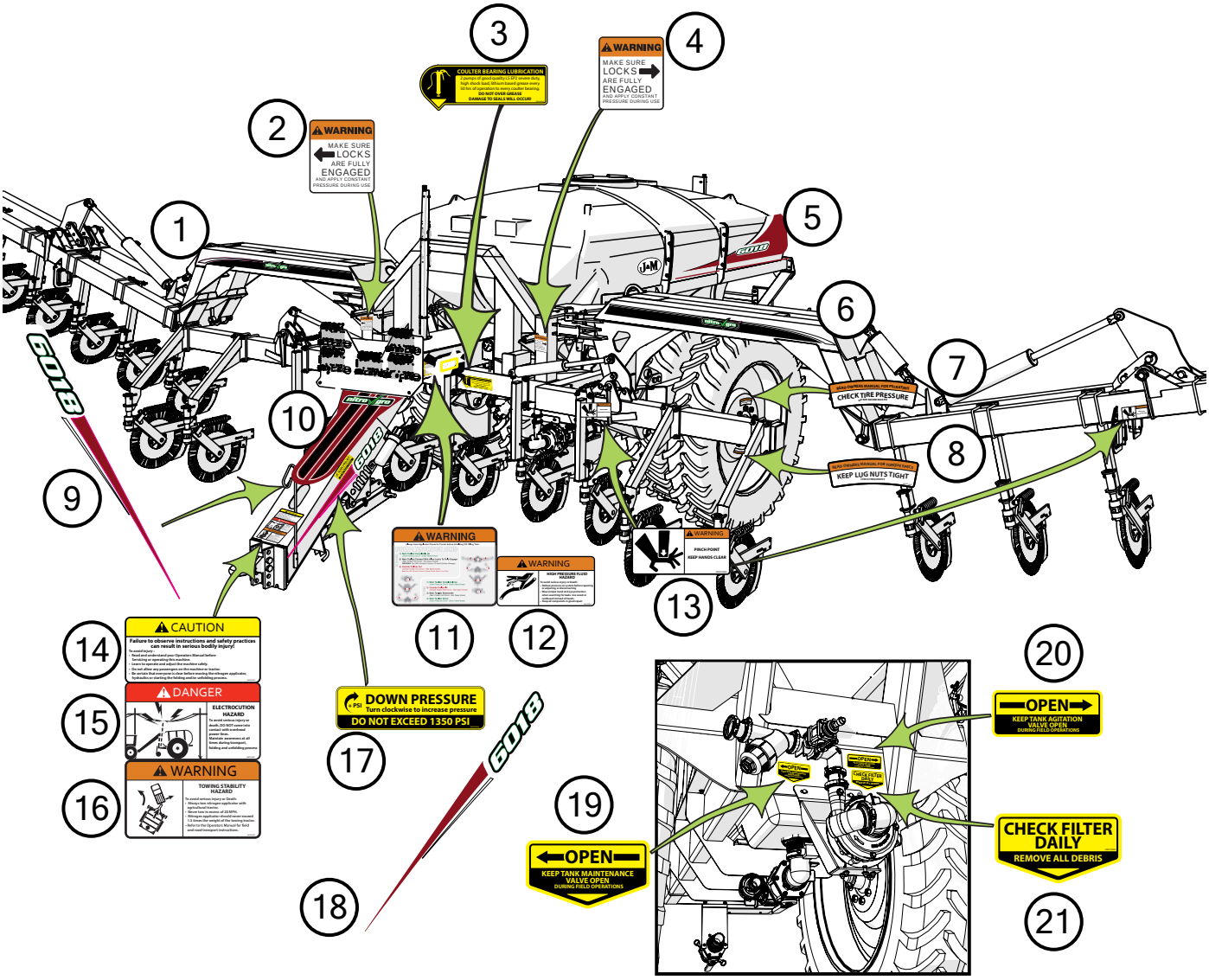

	Description	Part No.
1	NitroGro Wing Decal (Front Right, Rear Left)	JM0055012
2	Make Sure Locks are Fully Engaged Decal (Right)	JM0055013
3	Coulter Bearing Lubrication Decal	JM0038099
4	Make Sure Locks are Fully Engaged Decal (Left)	JM0055018
5	6018 Tank Stripes Red (Left)	JM0055208
5	6018 Tank Stripes Green (Left)	JM0055209
5	6018 Tank Stripes Red (Right)	JM0055210
5	6018 Tank Stripes Green (Right)	JM0055211
6	NitroGro Wing Decal (Front Left, Rear Right)	JM0055023
7	Check Tire Pressure Decal (NitroGro)	JM0038097
8	Keep Lug Nuts Tight Decal (NitroGro)	JM0035885
9	6018 Tongue Stripe Red (Right)	JM0055212
9	6018 Tongue Stripe Green (Right)	JM0055213
10	Top Red NitroGro Tongue Decal	JM0055027
10	Top Green NitroGro Tongue Decal	JM0055028

Decals

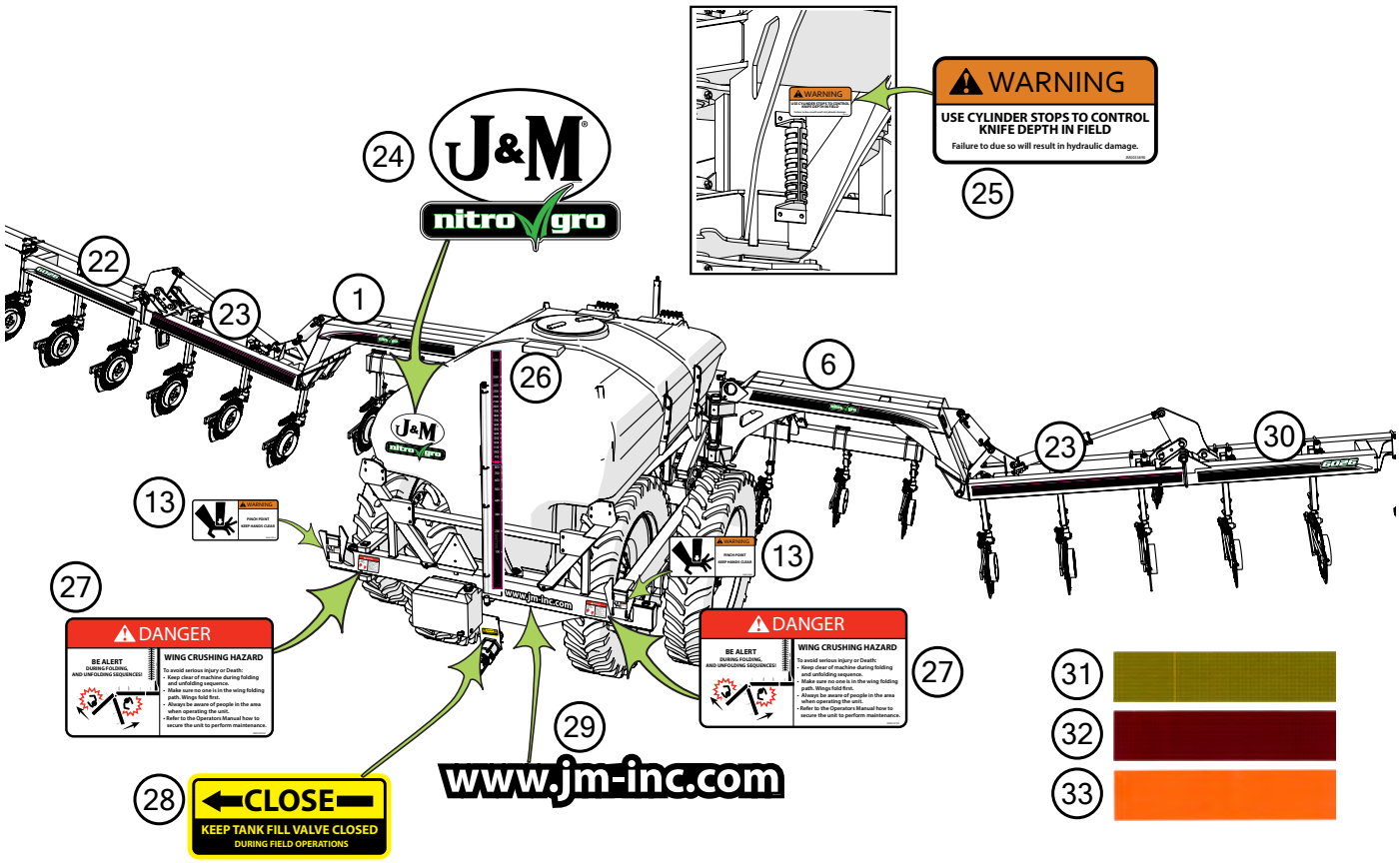

	Description	Part No.
11	Fold Instructions Decal (NitroGro)	JM0055029
12	Warning, High Pressure Fluid Hazard Decal	JM0035880
13	Warning, Pinch Point Decal	JM0014994
14	Caution, Failure to Observe Instructions Decal (NitroGro)	JM0035881
15	Danger, Electrocution Hazard Decal (NitroGro)	JM0035887
16	Warning, Towing Stability Hazard Decal (NitroGro)	JM0035882
17	Down Pressure Decal (NitroGro)	JM0035892
18	6018 Tongue Stripe Red (Left)	JM0055214
18	6018 Tongue Stripe Green (Left)	JM0055215
19	Open (Left) Keep Tank Maintenance Valve Open Decal	JM0039478
20	Open (Right) Keep Tank Agitation Valve Open Decal	JM0039479
21	Check Filter Daily Decal (NitroGro)	JM0035884
22	6018 Back Wing Stripe (Left)	JM0055216
23	Back Wing Solid Stripe	JM0055033
24	NitroGro Logo Decal 14-3/8" x 12-1/8"	JM0055034
25	Warning, Use Cylinder Stops Decal (NitroGro)	JM0035890
26	Gallon Marker Decal (NitroGro)	JM0055035
27	Danger, Wing Crushing Hazard Decal	JM0038100
28	Close (Left) Keep Tank Fill Valve Closed Decal	JM0035891
29	www.jm-inc.com Decal (NitroGro)	JM0038108
30	6018 Back Wing Stripe (Right)	JM0055217
31	Amber Reflective Decal 2" x 9"	JM0009946
32	Red Reflective Decal 2" x 9"	JM0009945
33	Orange Reflective Decal 2" x 9"	JM0009944

Hitch

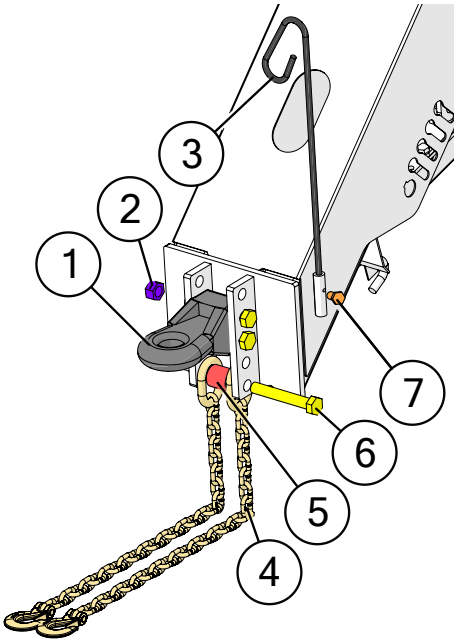

	Description	Part No.
1	CTD Perfect Hitch (Circular Hole)	JM0038515
2	1"-8 Gr2 Z Centerlock Hex Nut	JM0002149
3	1/2" Hose Holder Rod (12HHR)	JM0027120
4	40k Lb Safety Chain	JM0029261
5	NitroGro Applicator Safety Chain Spacer	JM0059128
6	1"-8 x 6-1/2" Gr5 Z Hex Bolt	JM0014192
7	3/8"-16 x 3/4" Gr5 Z Hex Bolt	JM0001663

Jack Assembly

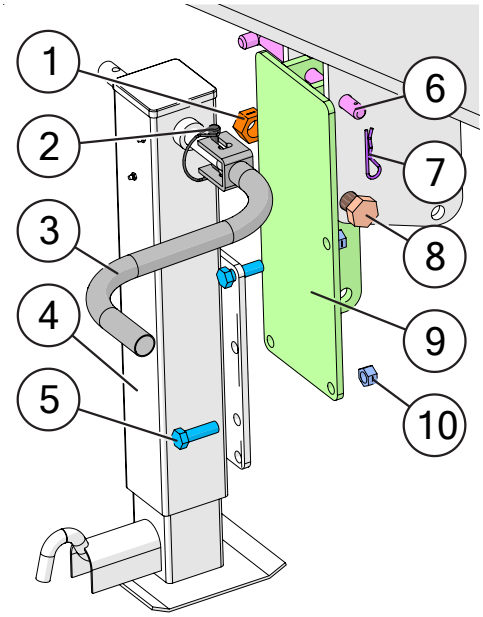

	Description	Part No.
1	1"-8 Gr2 Z Centerlock Hex Nut	JM0002149
2	3/8" x 2-1/2" Wire Lock Pin (38212WLP)	JM0014929
3	Jack Handle for 10,000 lb and Up	JM0037953
4	Jack Assembly (NitroGro & 510ST)	JM0030054
5	5/8"-11 x 2" Gr8 Z Hex Bolt	JM0001771
6	3/4" L Pin (10-9/32" Length)	JM0003076
7	3/16" x 2-1/2" Hair Clip Pin (316HP)	JM0001657
8	1"-8 x 6" Gr5 Z Hex Bolt	JM0002111
9	Jack Mounting Bracket (NitroGro)	JM0031545
10	5/8"-11 Gr2 Z Centerlock Hex Nut	JM0002146

Wing Rest

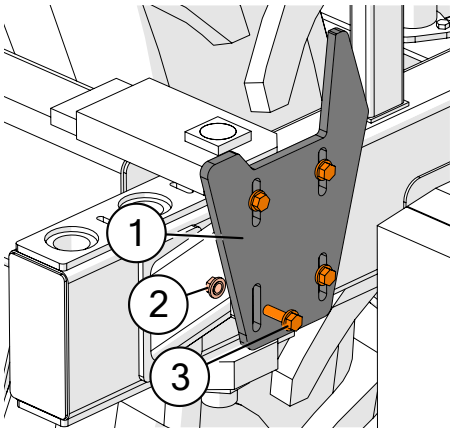

	Description	Part No.
1	Wing Rest Plate (NitroGro)	JM0047598
2	1/2"-13 Gr5 Z SF Hex Nut	JM0002153
3	1/2"-13 x 1-1/2" Gr5 Z SF Hex Bolt	JM0051480

Hub and Spindle Assembly

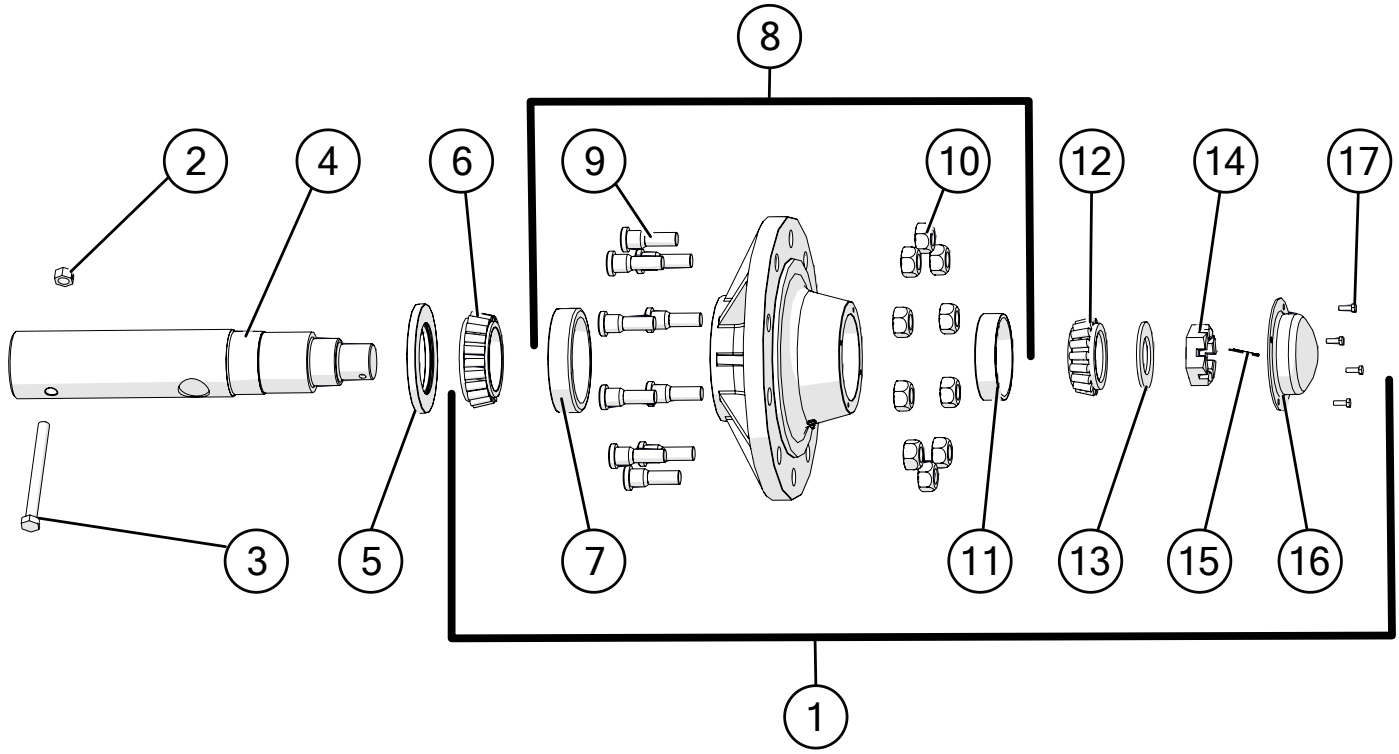

	Description	Part No.
1	W-881 Hub Assembly Complete with 3/4" Studs and Nuts (Less Seal and Spindle)	JM0050402
2	1"-8 Gr2 Z Centerlock Hex Nut	JM0002149
3	1"-8 x 7" Gr5 Z Hex Bolt	JM0016689
4	Spindle, 4-1/2" x 22-3/4" - Applicator 6000	JM0048051
5	Seal (4-1/4" ID, 6" OD) for Hub (CR-43771)	JM0018955
6	Large Bearing (HM218248)	JM0018849
7	Large Race (HM218210)	JM0018848
8	W-881 Hub with Large and Small Races, 3/4" Studs & Nuts (11.13 Pilot)	JM0020510
9	Wheel Stud (3/4"-16 x 1-3/4") 913564	JM0018957
10	Wheel Nut 3/4"-16	JM0018958
11	Small Race (HM212011)	JM0018854
12	Small Bearing (HM212049)	JM0018852
13	2-1/8" ID, 3-3/4" OD Flat Washer (3/16")	JM0015900
14	2"-12 Gr5 Z Castle Hex Nut (912973)	JM0015899
15	3/8" x 2-3/4" Z Roll Pin (905945)	JM0018956
16	Dust Cap 6-1/4" OD (for W-881 & W-891 Hub) (909921)	JM0018954
17	1/4"-20 x 1" Gr5 Z Hex Bolt	JM0002095

Gauge Wheel Assembly

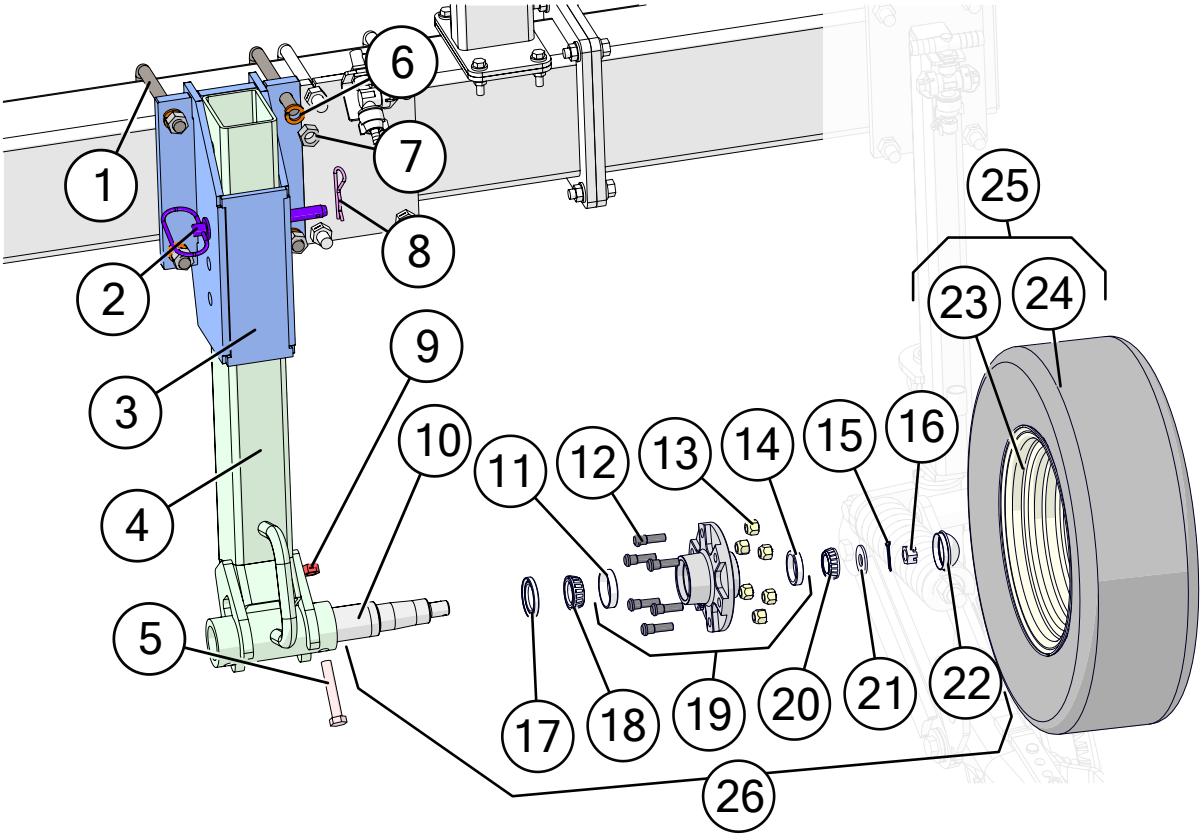

	Description	Part No.
1	5/8"-11 x 7-1/8" x 8-11/16" Square U-Bolt	JM0020901
2	Hitch Pin (5/8" x 6-1/2") (HP-586)	JM0003079
3	Gauge Wheel U-Bolt Mount Weldment	JM0047347
4	6000 Ambidextrous Gauge Wheel Weldment	JM0077730
5	1/2"-13 x 3" Gr5 Z Hex Bolt	JM0016678
6	5/8" Gr2 Z Lock Washer	JM0051157
7	5/8"-11 Gr2 Z Hex Nut	JM0001522
8	3/16" x 2-1/2" Hair Clip Pin (316HP)	JM0001657
9	1/2"-13 Gr2 Z Centerlock Hex Nut	JM0001511
10	1-3/4" Diameter Spindle (SS-134SC)	JM0026569
11	Large Cup for 6-8 Ton (LM48510) (104580)	JM0026565
12	Wheel Stud for Hub, 6-8 Ton (1/2"-20 x 1-7/8") (4187)	JM0019559
13	1/2"-20 Lug Nut, 6-8 Ton (5552)	JM0003062
14	Small Cup for 6-10 Ton (LM67010) (200500)	JM0026564
15	5/32" x 1-1/2" Cotter Pin	JM0014348
16	3/4"-16 Gr2 Castle Hex Nut	JM0002130
17	Grease Seal, 6-8 Ton (103953)	JM0026572
18	Large Inner Bearing for 6-8 Ton (LM48548) (104579)	JM0019563
19	G25 Hub with Races, Studs and Nuts, 7-8 Ton (105218)	JM0026566
20	Small Outer Cone for 6-10 Ton (LM67048)	JM0019564
21	3/4" USS Z Flat Washer	JM0010006
22	Dust Cap, 6-10 Ton (103969)	JM0026567
23	14x6 - 6 Hole Wheel Rim	JM0019535
24	ST215-75D14 Carlisle Sport Trail Tire	JM0019529
25	ST215-75D14 Carlisle Sport Trail Tire and 14x6 - 6 Hole Wheel Rim	JM0019536
26	G25-6 Hub, Spindle, and Bearings Assembly	JM0026571

Toolbar

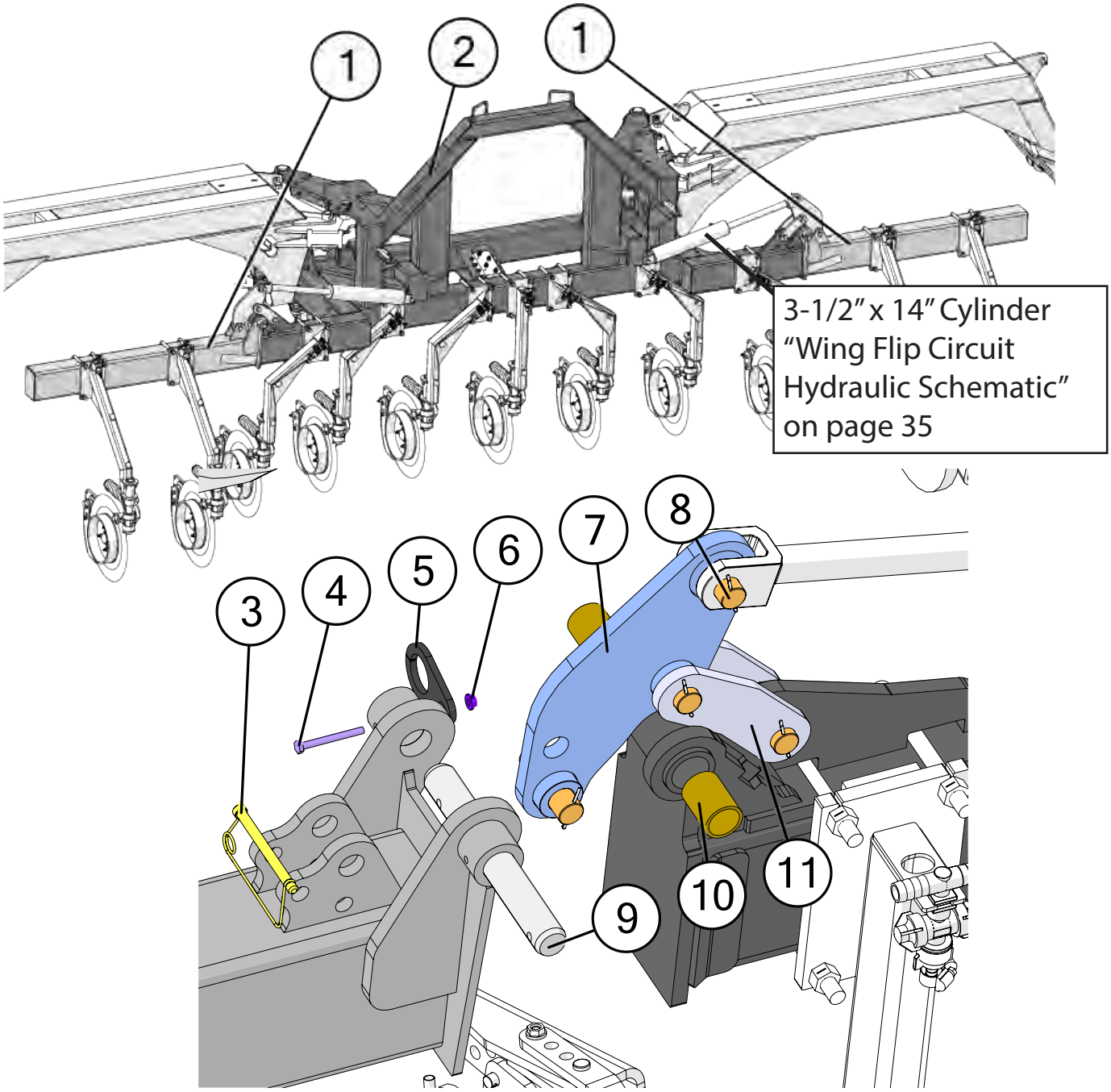

	Description	Part No.
1	Stub Wing Weldment	JM0046687
2	Toolbar Center Section NitroGro 6000	JM0047104
3	3/8" x 4" Usable Length Zinc Lynch Pin with Square Retainer	JM0079502
4	1/4"-20 x 2-1/2" Gr5 Z Hex Bolt	JM0001506
5	1-1/2" Pin Keeper Plate (NitroGro 6000)	JM0041482
6	1/4"-20 Gr5 Z SF Hex Nut	JM0001630
7	Stub Wing Main Link Weldment	JM0047263
8	1" x 3-1/2" Clevis Pin with Cotter Pins	JM0001817
9	1-1/4" ID x 1-1/2" OD x 2" Long Sleeve Composite Bushing	JM0021957
10	Applicator Stub Wing Pin	JM0047296
11	Stub Wing Small Linkage	JM0047264

Inside Wing and Connections

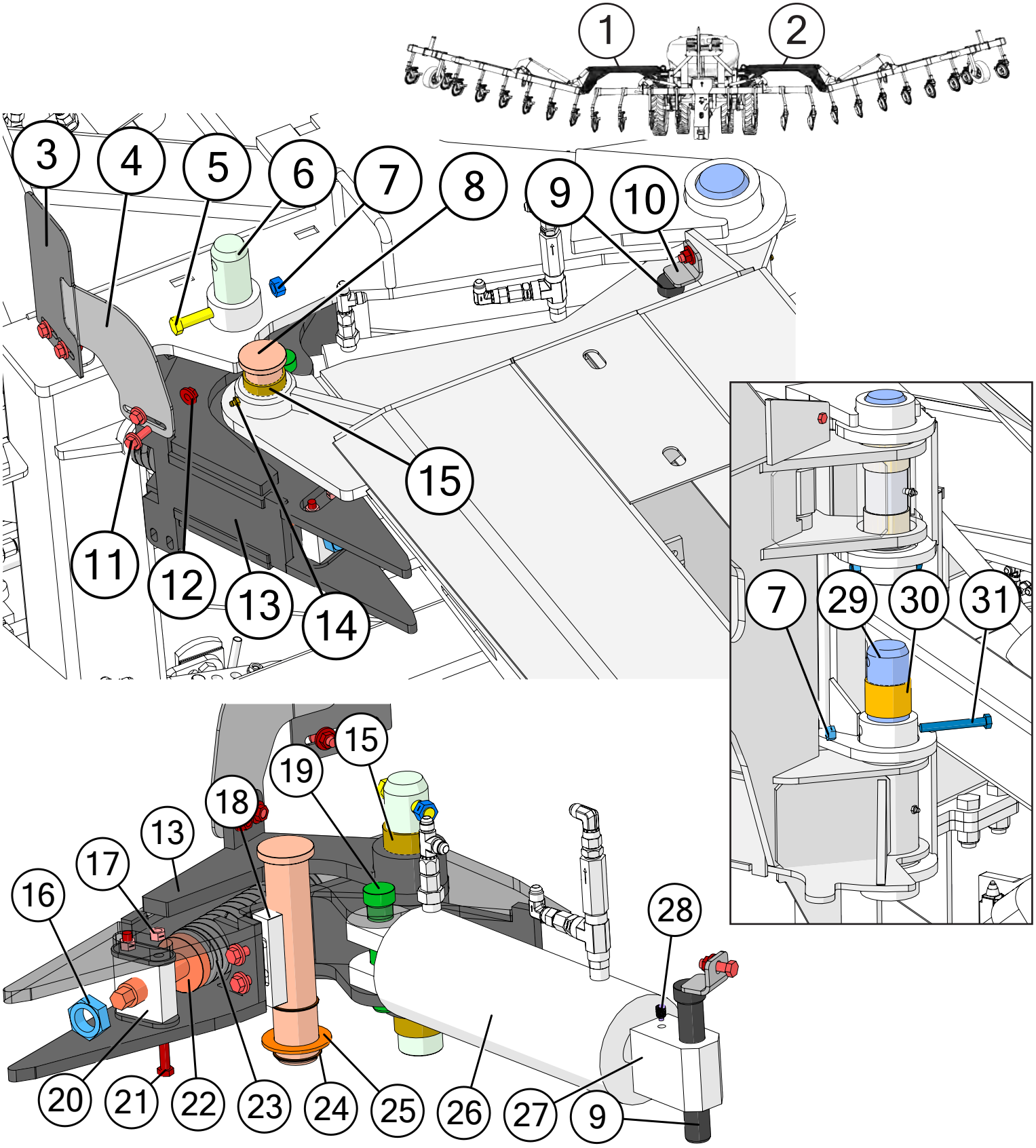

Inside Wing and Connections

	Description	Part No.
1	Inside Wing Weldment (Passenger's Side) (6018, 6026)	JM0045028
2	Inside Wing Weldment (Driver's Side) (6018, 6026)	JM0047901
3	6000 Series Latch Sign - Stationary	JM0068709
4	6000 Applicator Latch Sign - Moving (Driver Side)	JM0062740
4	6000 Applicator Latch Sign - Moving (Passenger Side)	JM0068715
5	1/2"-13 x 3" Gr5 Z Hex Bolt	JM0016678
6	11-1/4" Clevis Pin (1-3/4" Diameter) - Latch Pin	JM0053933
7	1/2"-13 Gr2 Z Centerlock Hex Nut	JM0001511
8	6000 Applicator Spinning Latch Pin	JM0077595
9	1" Pin for 4" x 8-1/2" Latch Cylinder - Clevis End	JM0061801
10	Bolt Pin Keeper (NitroGro 6000 Series)	JM0045972
11	3/8"-16 x 1" Gr5 Z SF Hex Bolt	JM0002092
12	3/8"-16 Gr5 Z SF Hex Nut	JM0002152
13	Spring Latch Weldment (NitroGro 6000 Series)	JM0062110
14	1/8" NPT Male x 11/16" Straight Grease Fitting	JM0009756
15	1-3/4" ID x 2" OD x 1-1/2" Sleeve Composite Bushing	JM0030328
16	1"-8 Gr2 Z Hex Jam Nut	JM0001705
17	3/8"-16 Gr2 Z Centerlock Hex Nut	JM0001512
18	6000 Applicator Latch Wear Shoe	JM0061649
19	1" Pin for 4x8.5 Latch Cylinder - Butt End	JM0073959
20	6000 Applicator Spring Latch Compression Plate - Zinced	JM0060661
21	3/8"-16 x 3-1/2" Gr5 Z Hex Bolt	JM0001986
22	Press-Fit Latch Screw Spring Plunger	JM0074374
23	3/8" x 2-7/16" OD x 10" Long Wire Compression Spring	JM0068707
24	1-3/4" Shaft Diameter Spirolox WSM-175 Retaining Ring	JM0043321
25	Swivel Hitch Pin Washer (2-3/4" OD x 1-25/32" ID)	JM0043322
26	4" Bore, 8-1/2" Stroke Cylinder Assembly	JM0062922
27	Solid Clevis for 4" x 8-1/2" Cylinder	JM0074197
28	3/8"-16 x 1/2" Socket Set Screw Nylon Tip	JM0037255
29	11-1/4" Clevis Pin (2-1/2" Diameter)	JM0046032
30	2-1/2" ID x 2-3/4" OD x 2" Long Sleeve Composite Bushing	JM0062417
31	1/2"-13 x 4" Gr5 Z Hex Bolt	JM0048014

Middle Wing and Connections

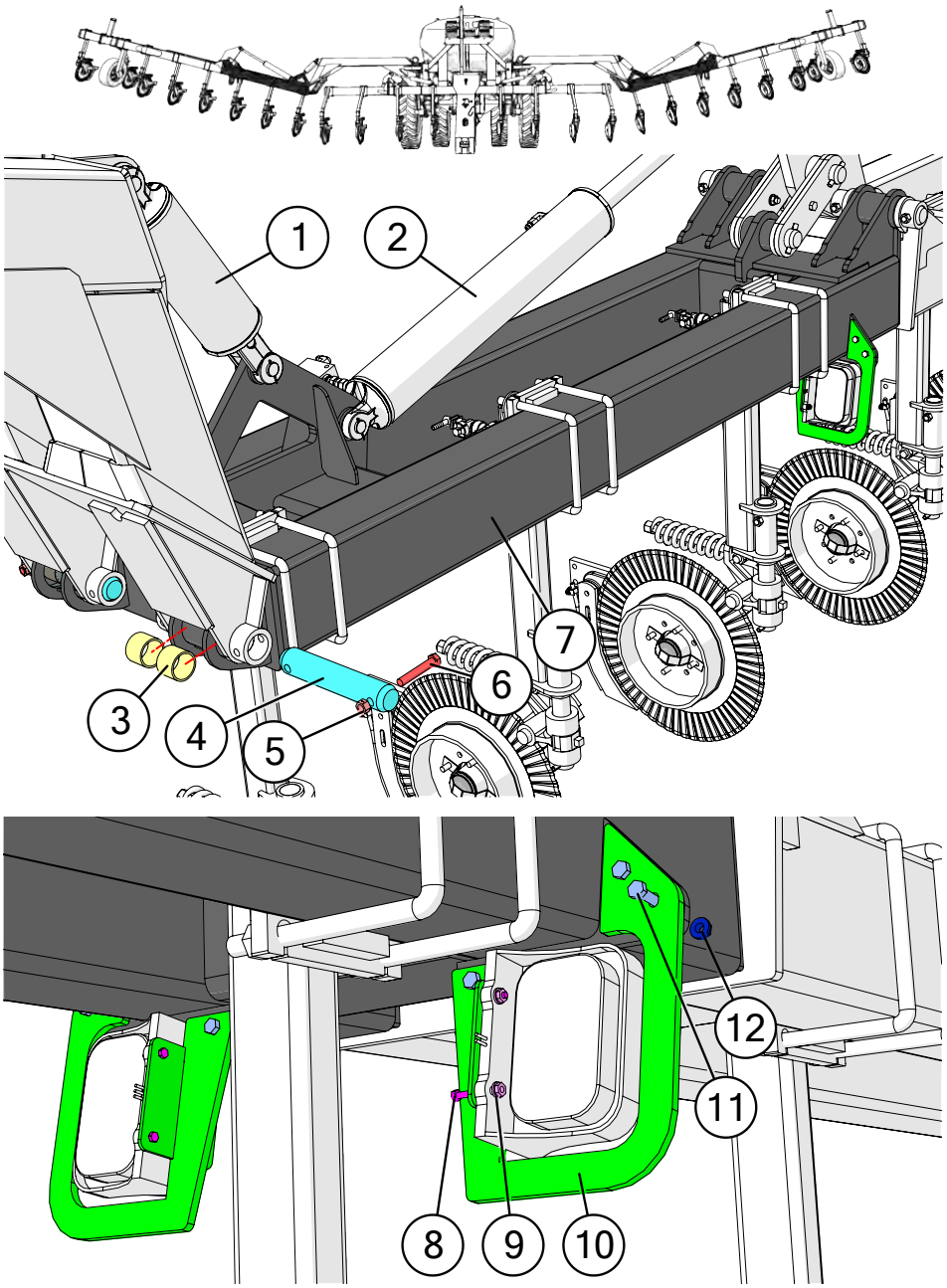

	Description	Part No.
1	4" Bore, 8" Stroke Welded Hydraulic Cylinder - Heavier Clevises	JM0030757
1	Seal Kit for 4" x 8" Hydraulic Cylinder (JD-608)	JM0039241
2	4" Bore, 24" Stroke Welded Hydraulic Cylinder - Heavier Clevises	JM0030730
2	Seal Kit for 4" x 24" Hydraulic Cylinder (JD-609)	JM0039242
3	1-3/4" ID x 2" OD x 1-1/2" Sleeve Composite Bearing	JM0030328
4	9-1/4" Clevis Pin (1-3/4" Diameter)	JM0046030
5	1/2"-13 Gr2 Z Centerlock Hex Nut	JM0001511
6	1/2"-13 x 3" Gr5 Z Hex Bolt	JM0016678
7	Middle Wing Weldment	JM0045238
8	#10-24 x 13/16" Gr5 Z Hex Bolt	JM0048013
9	#10-24 Gr5 Z SF Hex Nut	JM0009983
10	Tail Light Bracket Weldment	JM0047850
11	5/16"-18 x 1" Gr5 Z Hex Bolt	JM0001743
12	5/16"-18 Gr5 Z SF Hex Nut	JM0014049

Outside Wing and Connections

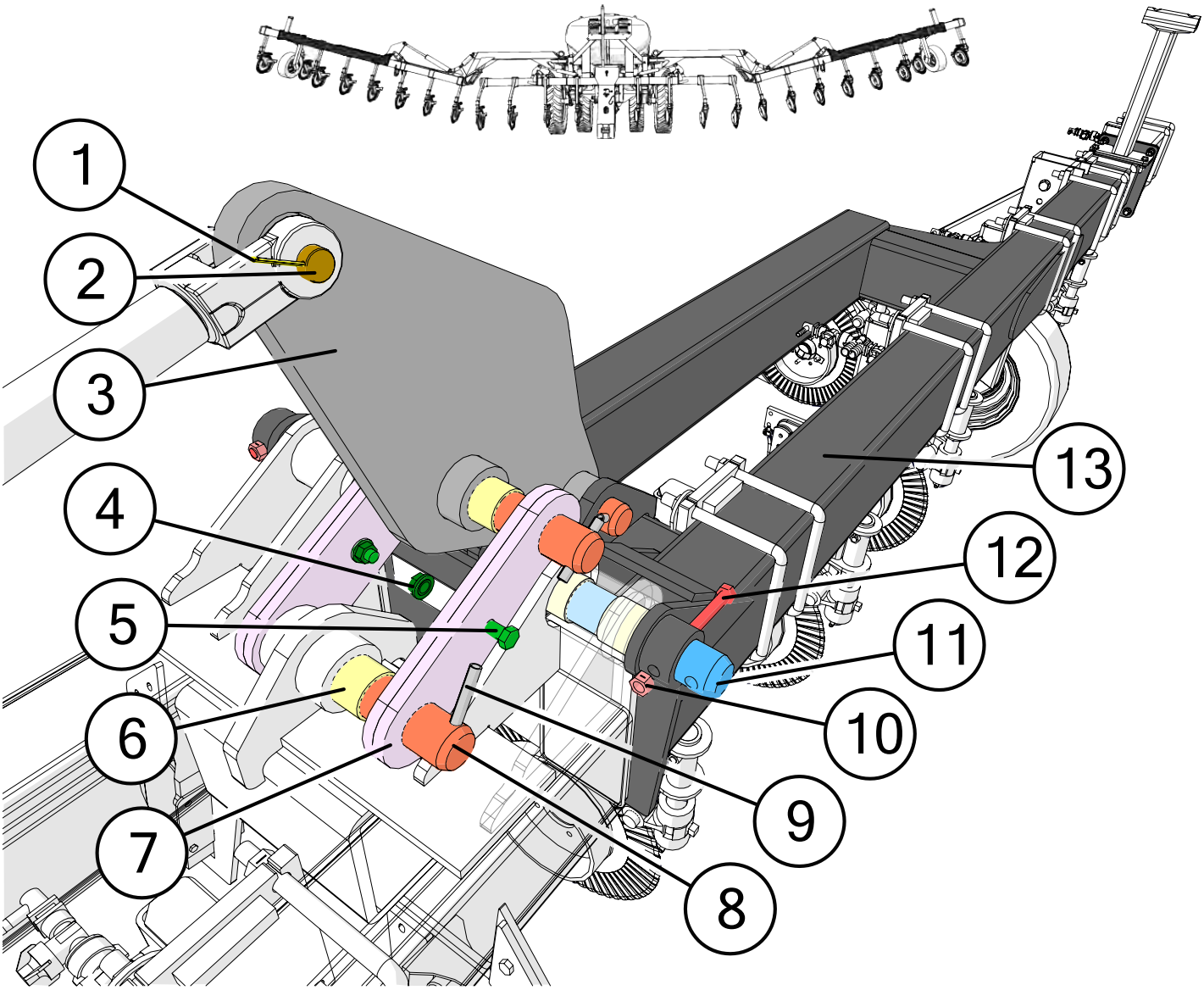

	Description	Part No.
1	Cotter Pin (for 1" x 3-2/5" Clevis Pin)	JM0003064
2	1" x 3-2/5" Clevis Pin	JM0001816
3	Long Fold Straight Auger Master Link Weldment	JM0046033
4	1/2"-13 Gr5 Z SF Hex Nut	JM0002153
5	1/2"-11 x 1-3/4" Gr5 Z SF Hex Bolt	JM0047937
6	1-3/4" ID x 2" OD x 1-1/2" Sleeve Composite Bearing	JM0030328
7	Outside Wing Slave Link	JM0047457
8	7-1/8" Clevis Pin (1-3/4" Diameter)	JM0047458
9	7/16" x 2-3/4" Z Roll Pin	JM0009895
10	1/2"-13 Gr2 Z Centerlock Hex Nut	JM0001511
11	9-1/4" Clevis Pin (1-3/4" Diameter)	JM0046030
12	1/2"-13 x 3" Gr5 Z Hex Bolt	JM0016678
13	Outside Wing Weldment (Driver Side)	JM0047908
13	Outside Wing Weldment (Passenger Side)	JM0045296

Wing End and Wing Prop

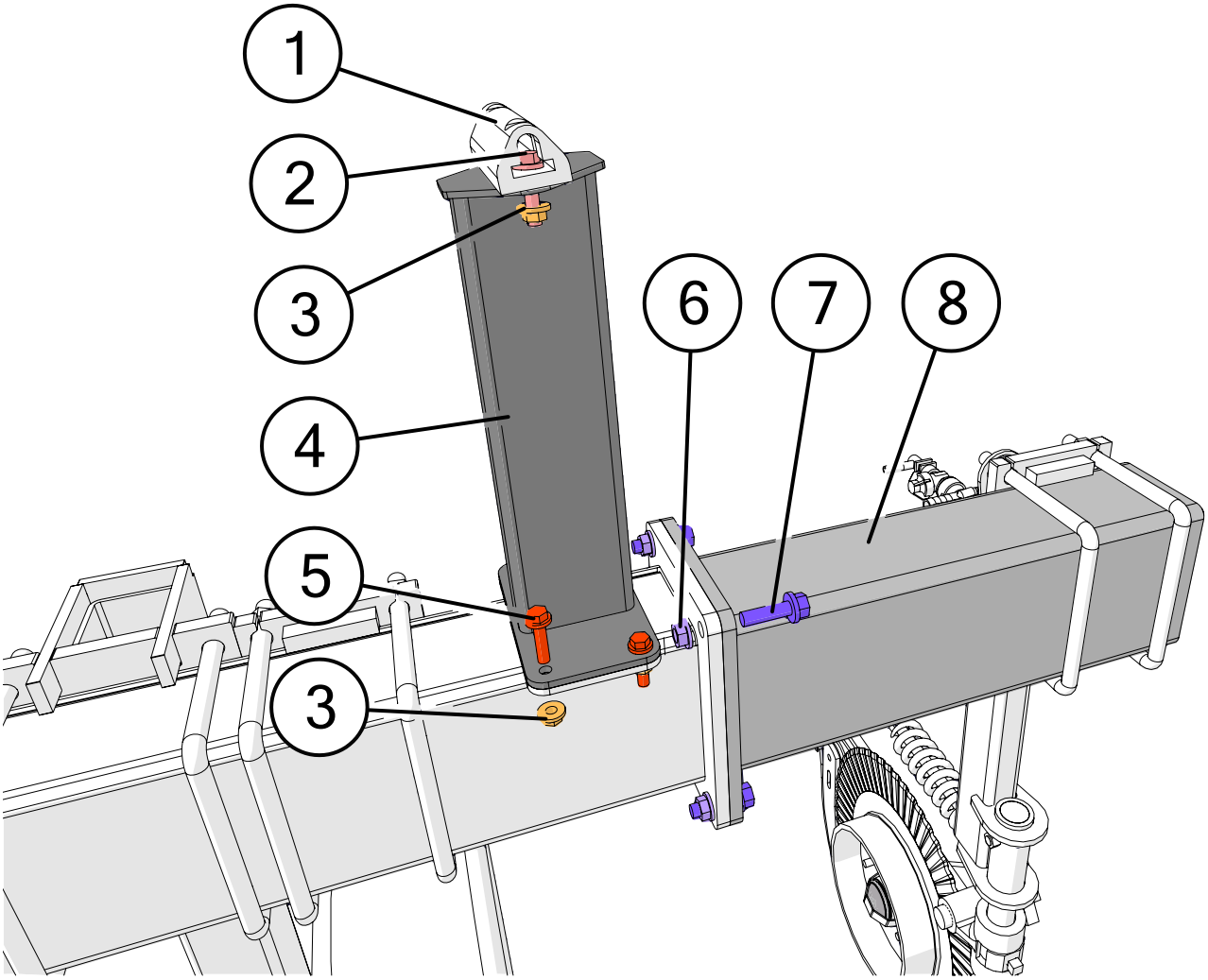

	Description	Part No.
1	6" x 1-7/8" Auger Rest Triangle Pad	JM0037644
2	3/8"-16 x 1" Gr5 Z SF Hex Bolt	JM0002092
3	3/8"-16 Gr5 Z SF Hex Nut	JM0002152
4	2600 Gallon Tank Wing Prop	JM0047490
5	3/8"-16 x 1-1/2" Gr5 Z SF Hex Bolt	JM0001633
6	1/2"-13 Gr5 Z SF Hex Nut	JM0002153
7	1/2"-11 x 1-3/4" Gr5 Z SF Hex Bolt	JM0047937
8	25 Row Wing Extension	JM0047462

Walking Dual Wheel Assembly

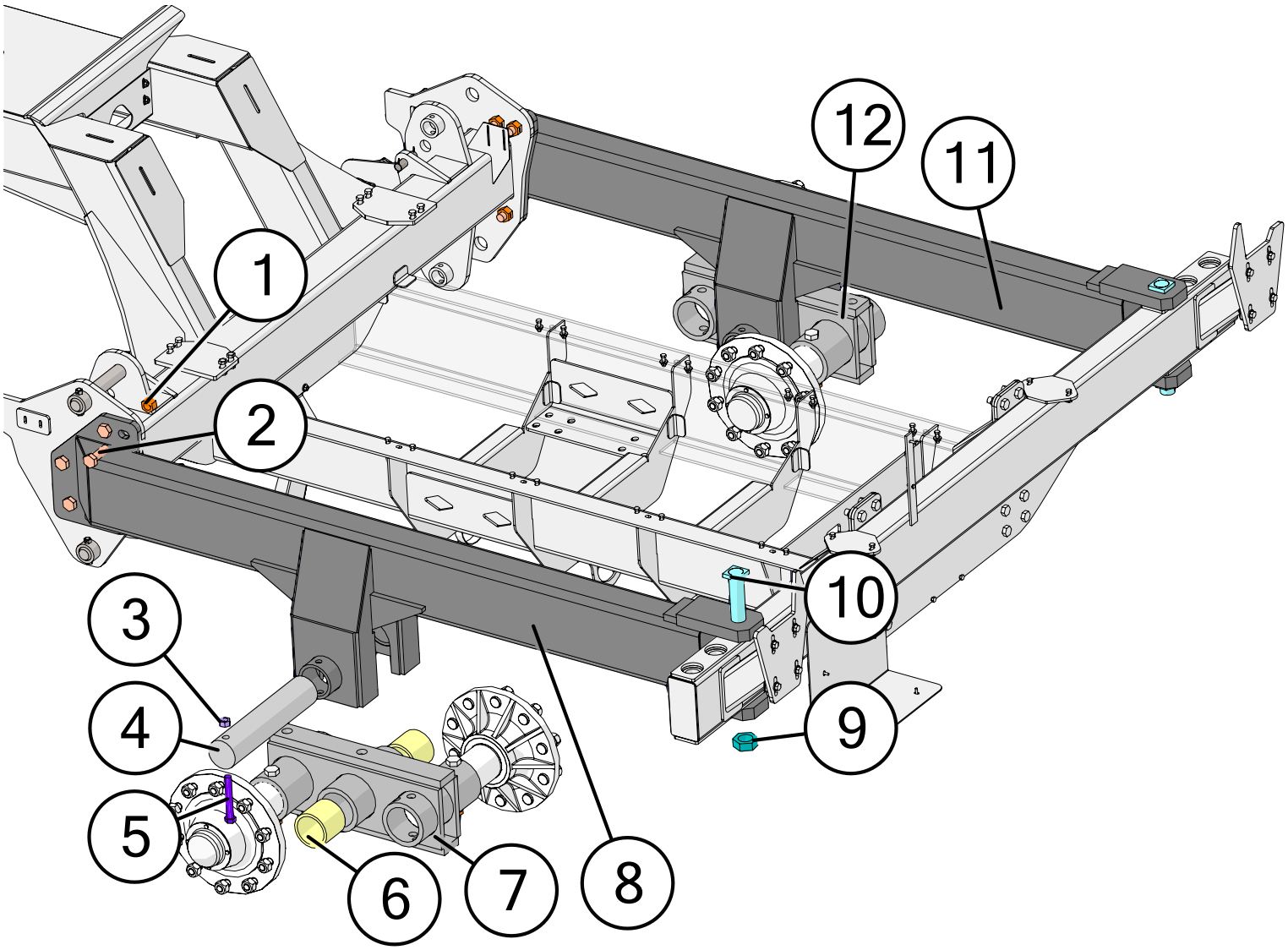

	Description	Part No.
1	1"-8 Gr2 Z Centerlock Hex Nut	JM0002149
2	1"-8 x 3" Gr5 Z Hex Bolt	JM0016686
3	3/4"-10 Gr2 Z Centerlock Hex Nut	JM0002147
4	3-3/4" x 17-1/2" Pivot Pin (334PP)	JM0019928
5	3/4"-10 x 5-1/2" Gr5 Z Hex Bolt	JM0015522
6	3-3/4" ID, 4-1/2" OD Bronze Bushing (4" Lg) (BB-334)	JM0010570
7	Triple Pivot Weldment - Close Coupled Walker (Driver's Side)	JM0046012
8	Walking Axle Assembly (Driver's Side) - NitroGro (7,000 lbs.)	JM0045919
9	1-3/4"-12 Z Gr5 Hex Jam Nut	JM0009752
10	1-3/4" x 13" Gr5 Bolt	JM0020328
11	Walking Axle Assembly (Passenger's Side) - NitroGro (7,000 lbs.)	JM0045526
12	Triple Pivot Weldment - Close Coupled Walker (Passenger's Side)	JM0037521

Tank Supports

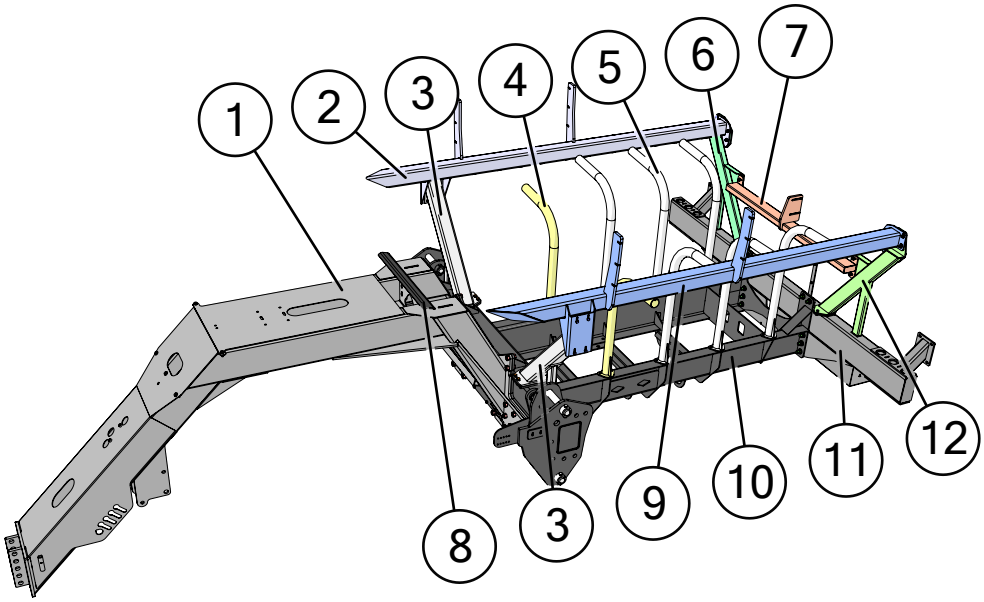

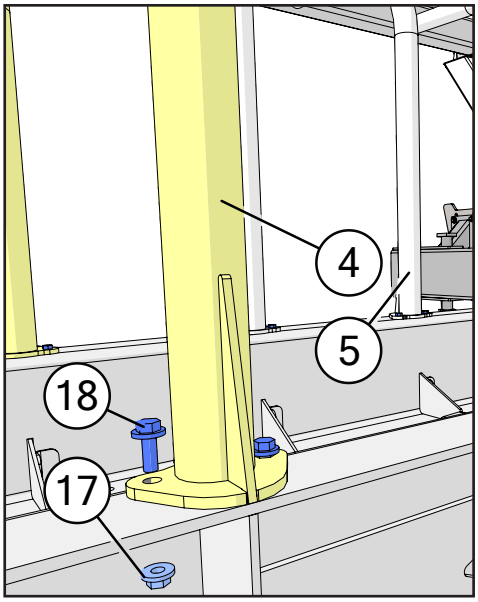

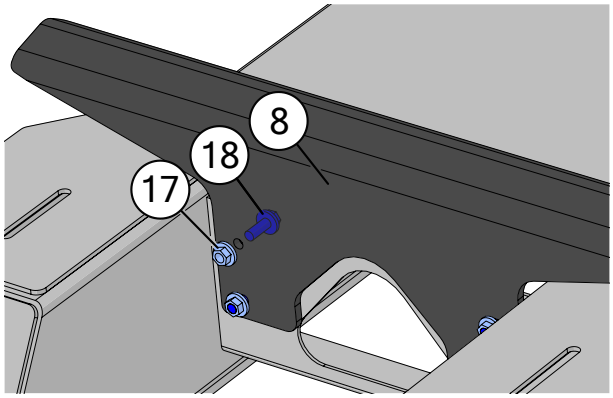

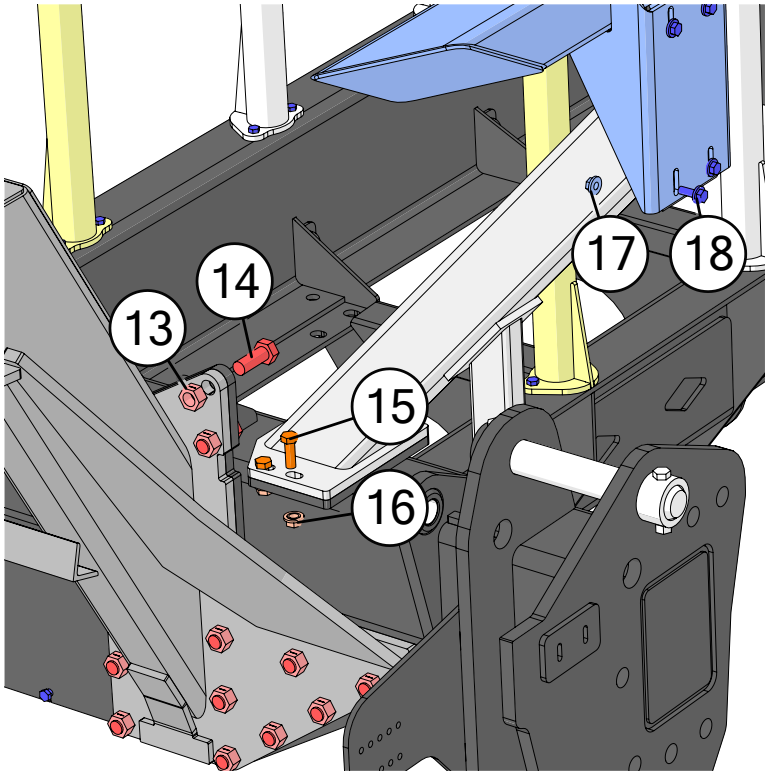

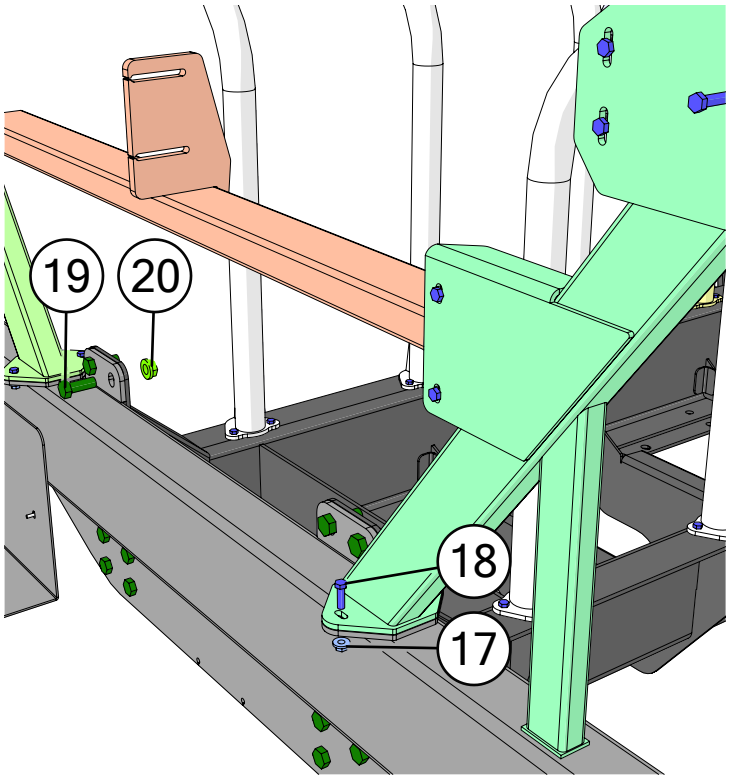

Tank Supports

	Description	Part No.
1	Base Frame Weldment - NitroGro	JM0058146
2	Side Tank Support Tube Weldment	JM0046878
3	Front Tank Support Tube Weldment	JM0046875
4	Tank Support Rib Weldment (33-5/32" Height)	JM0046591
5	Tank Support Rib Weldment (37-7/8" Height)	JM0046594
6	Tank Support Rear Tube Weldment (Passenger's Side)	JM0046880
7	Tank Rear Support Tube Weldment	JM0047584
8	Front Tank Support	JM0046600
9	Tank Support Tube Weldment	JM0047816
10	Base Frame Weldment - NitroGro	JM0058152
11	Uni-Frame Rear - Tandems Tube	JM0053810
12	Tank Support Rear Tube Weldment (Driver's Side)	JM0047819
13	3/4"-10 Gr2 Z Centerlock Hex Nut	JM0002147
14	3/4"-10 x 2" Gr8 YZ Hex Bolt	JM0041923
15	1/2"-13 x 1-1/2" Gr5 Z Hex Bolt	JM0002100
16	1/2"-13 Gr5 Z SF Hex Nut	JM0002153
17	3/8"-16 Gr5 Z SF Hex Nut	JM0002152
18	3/8"-16 x 1" Gr5 Z SF Hex Bolt	JM0002092
19	3/4"-10 x 2" Gr5 Z Hex Bolt	JM0002106
20	3/4"-10 Gr5 Z SF Hex Nut	JM0009921

Tank Strap Down

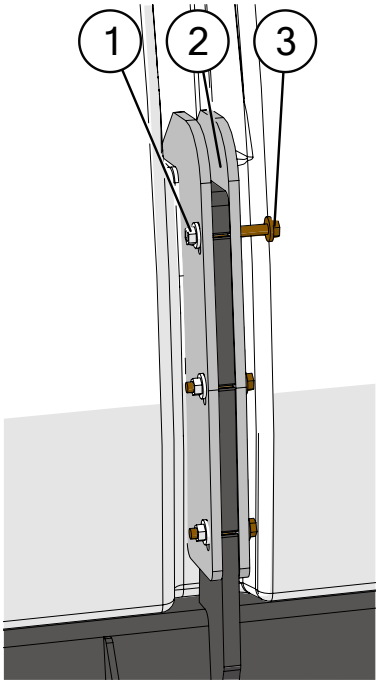

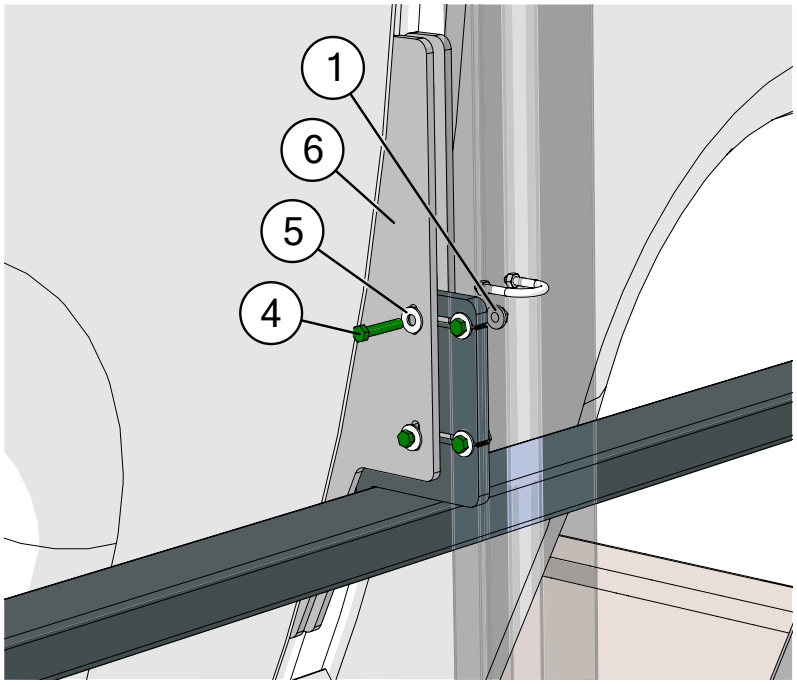

	Description	Part No.
1	3/8"-16 Gr5 Z SF Hex Nut	JM0002152
2	Vertical Bolt-on Tank Support	JM0047572
3	3/8"-16 x 2" Gr5 Z SF Hex Bolt	JM0016070
4	3/8"-16 x 2" Gr5 Z Hex Bolt	JM0001510
5	3/8" ID, 1" OD Z Flat Washer	JM0003061
6	Rear Vertical Tank Support Plate	JM0047583

Tank

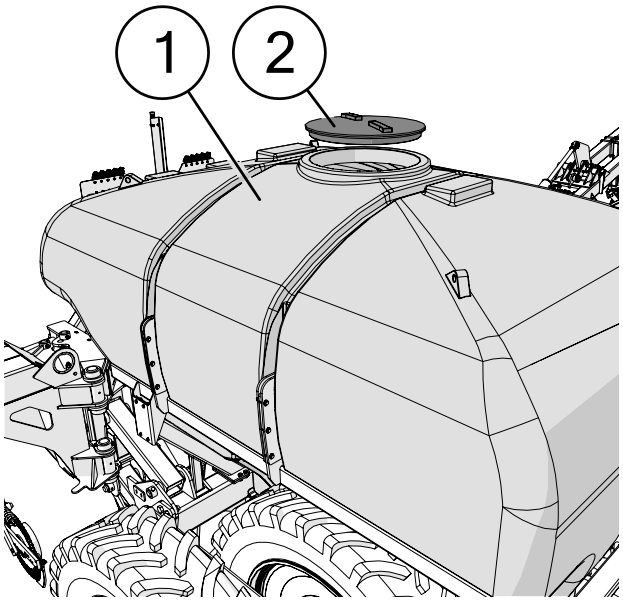

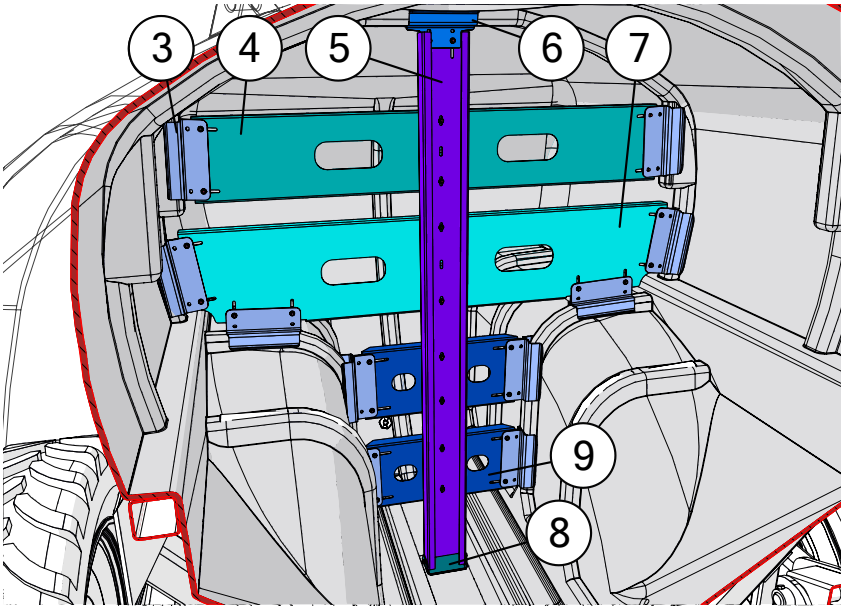

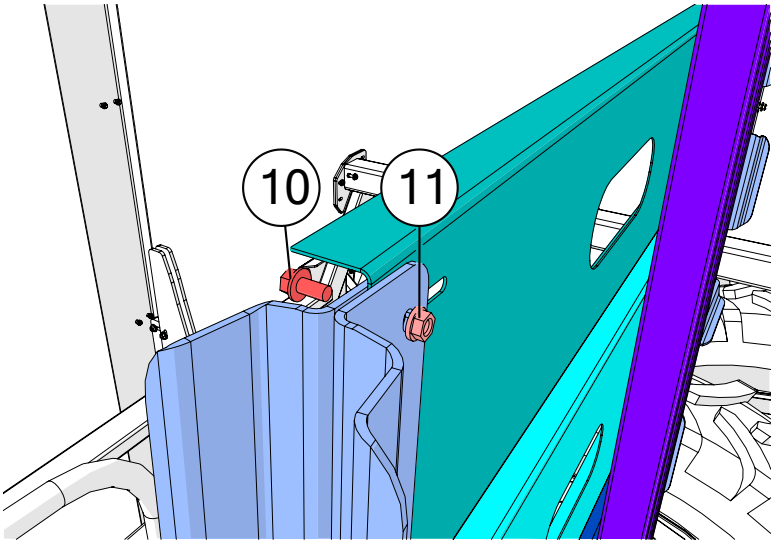

	Description	Part No.
1	2600 Gallon Rounded Tank	JM0046439
2	Norwesco 22in Ventless Lid Assembly - 63863	JM0047873
3	Applicator Poly Tank Baffle - Clamp for Baffle	JM0047722
4	Applicator Poly Tank Baffle - 2600 Gallon Specific Tank Baffle	JM0047728
5	Applicator Poly Tank Baffle - Center Pillar (2600)	JM0046872
6	Applicator Poly Tank Baffle - Clamp for Center Pillar	JM0047726
7	Applicator Poly Tank Baffle - Middle Baffle	JM0046874
8	Applicator Poly Tank Baffle - Foot	JM0047712
9	Applicator Poly Tank Baffle - Lower Baffle	JM0046873
10	3/8”-16 x 3/4” SS SF Hex Bolt	JM0048129
11	3/8”-16 SS SF Hex Nut	JM0048132

Hydraulic 155 ACE Pump and Manifold

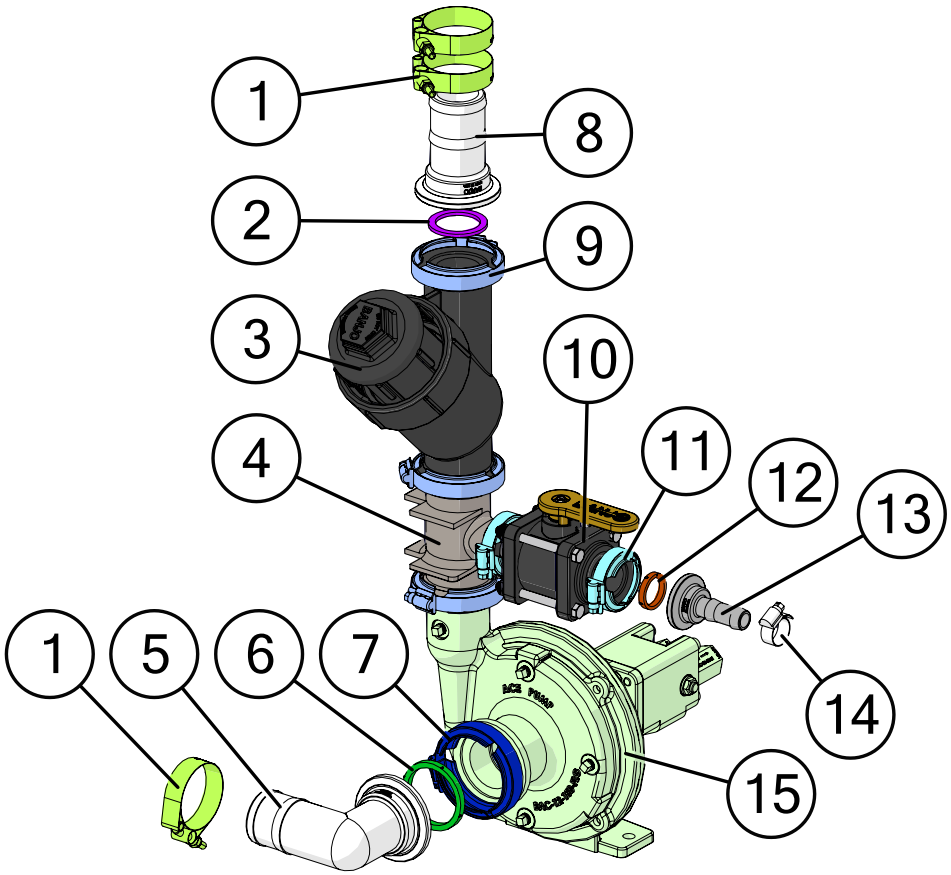

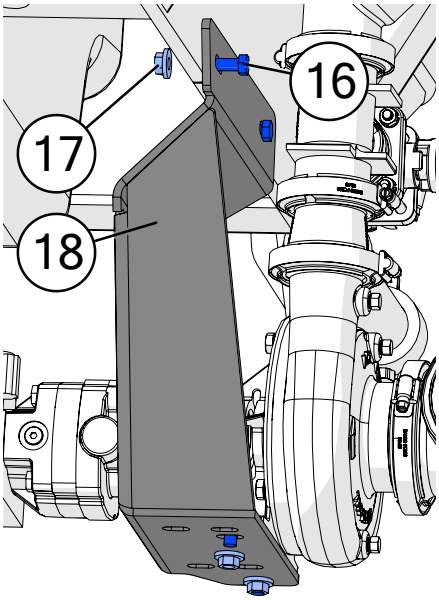

	Description	Part No.
1	T-Bolt Hose Clamp 2" Hose, 2-5/16" Min OD	JM0035247
2	Manifold Gasket for M200 Fittings	JM0021145
3	Manifold Y Strainer - M200 Manifold Flange, 30 Mesh	JM0033803
4	M200 Manifold Flange x M200 Manifold Flange x M100 Manifold Flange; Tee	JM0035116
5	2" Hose Barb x M220 Manifold Flange; 90 Degree	JM0033807
6	Manifold Gasket for M220 Fittings	JM0035278
7	Manifold Flange Clamp for M220	JM0035238
8	M200 Manifold Flange x 2" Hose Barb; Straight	JM0035137
9	Manifold Flange Clamp for M200 Fittings	JM0035251
10	Ball Valve with M100 Manifold Flange	JM0033824
11	Manifold Flange Clamp for M100 Fittings	JM0032496
12	Manifold Gasket for M100 Fittings with Rib	JM0035239
13	M100 Manifold Flange x 3/4" Hose Barb; Straight	JM0021401
14	3/4" Hose Clamp SS	JM0039205
15	FMSC-155F-HYD-206 Ace Pump	JM0038662
16	3/8"-16 x 1-1/4" Gr5 Z Hex Bolt	JM0016675
17	3/8"-16 Gr5 Z SF Hex Nut	JM0002152
18	Applicator Pump Mounting Bracket	JM0050799
19	Ace 150/155 Pump Hydraulic Side Replacement Seal Kit - RK-BAC-75-HYD-L	JM0061310
20	Ace 150 Pump Water Side Replacement Seal Kit - RK-FMCSC-150	JM0061308
21	Ace 155 Pump Water Side Replacement Seal Kit - RK-FMCSC-PRO5	JM0080001

In 2021 we switched to a 155 pump as a replacement for the 150 pump. The water side seal kit is the only difference when it comes to ordering parts. A 150 model number is 48874 and a 155 model number is FMCSC-155F-HYD-SAE.

Hydraulic 750 ACE Pump and Manifold

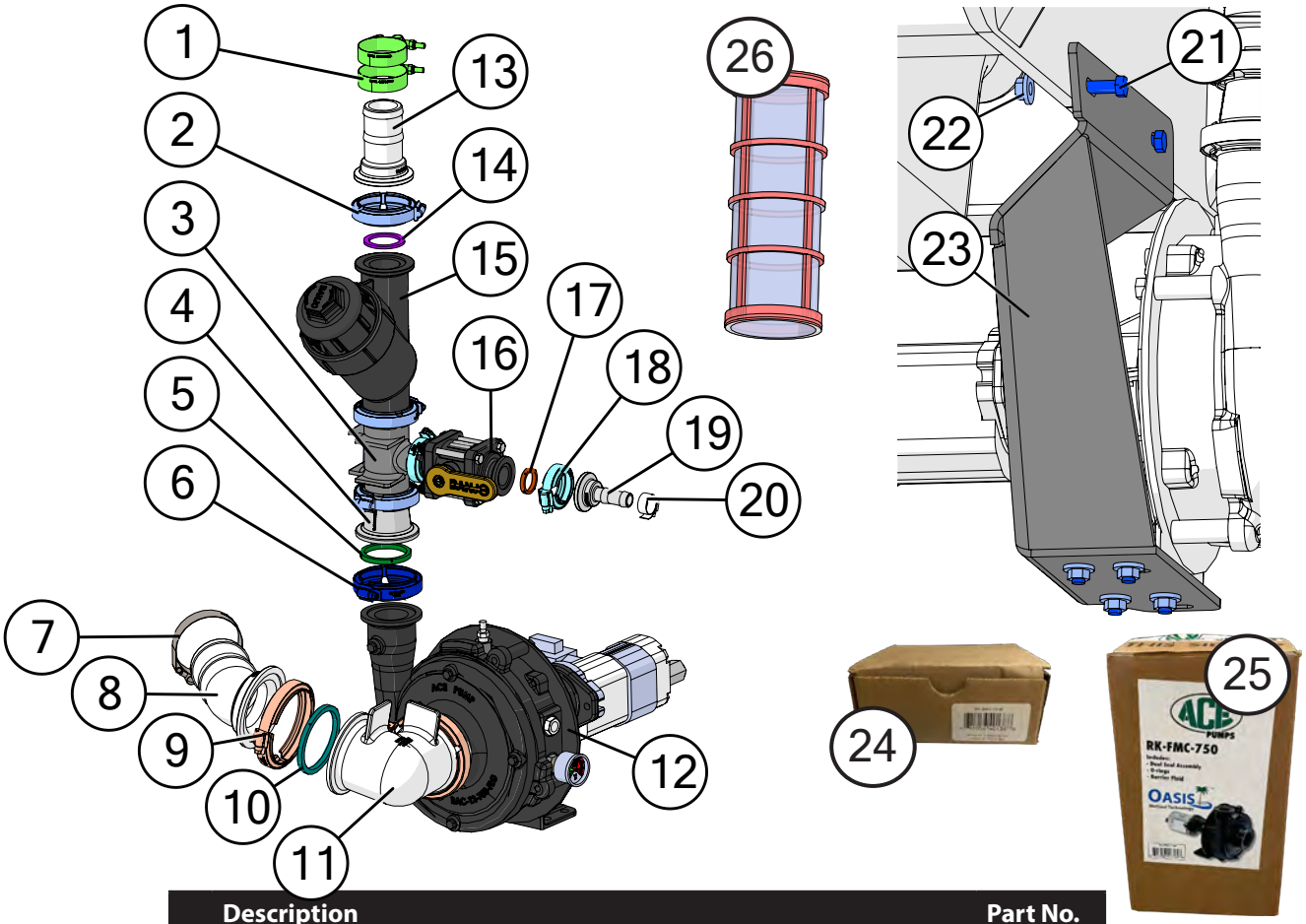

	Description	Part No.
1	T-Bolt Hose Clamp 2" Hose, 2-5/16" Min OD	JM0035247
2	Manifold Flange Clamp for M200 Fittings	JM0035251
3	M200 Manifold Flange x M200 Manifold Flange x M100 Manifold Flange; Tee	JM0035116
4	2" Full Port Manifold x 2" Manifold Flange Reducer Coupling	JM0035131
5	Manifold Gasket for M220 Fittings	JM0035278
6	Manifold Flange Clamp for M220	JM0035238
7	T-Bolt Hose Clamp 3" Hose, 3-5/16" Min OD	JM0035248
8	3" Hose Barb x M300 Manifold Flange; 45°	JM0033989
9	Manifold Flange Clamp for M300 Fittings	JM0035237
10	Manifold Gasket for M300 Fittings with Rib	JM0021239
11	M300 Manifold Flange x M300 Manifold Flange; 90 Degree	JM0033979
12	FMC-750F-HYD-M22 Ace Pump	JM0050785
13	M200 Manifold Flange x 2" Hose Barb; Straight	JM0035137
14	Manifold Gasket for M200 Fittings	JM0021145
15	Manifold Y Strainer - M200 Manifold Flange, 30 Mesh	JM0033803
16	Ball Valve with M100 Manifold Flange	JM0033824
17	Manifold Gasket for M100 Fittings with Rib	JM0035239
18	Manifold Flange Clamp for M100 Fittings	JM0032496
19	M100 Manifold Flange x 3/4" Hose Barb; Straight	JM0021401
20	3/4" Hose Clamp SS	JM0039205
21	3/8"-16 x 1-1/4" Gr5 Z Hex Bolt	JM0016675
22	3/8"-16 Gr5 Z SF Hex Nut	JM0002152
23	Applicator Pump Mounting Bracket	JM0050799
24	Ace 750 Pump Hydraulic Side Replacement Seal Kit - RK-BAC-75-M	JM0061314
25	Ace 750 Pump Water Side Replacement Seal Kit - RK-FMC-750	JM0061312
26	Strainer Screen - 30 Mesh - LS230	JM0079849

Raven Manifold

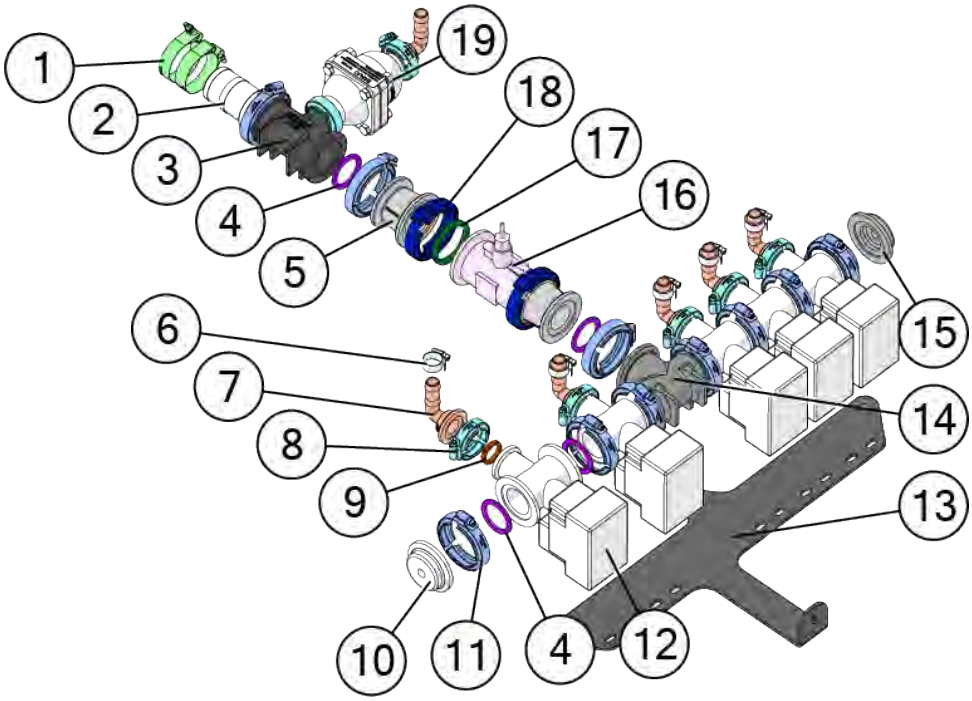

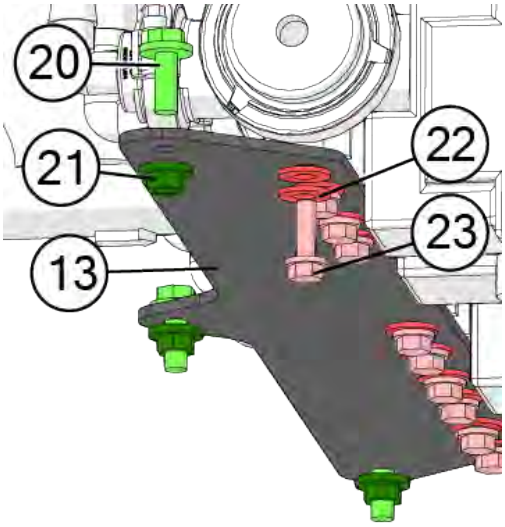

	Description	Part No.
1	T-Bolt Hose Clamp 2" Hose, 2-5/16" Min OD	JM0035247
2	2" Hose Barb x M220 Manifold Flange; Straight	JM0033796
3	M200 Manifold Flange x M200 Manifold Flange x M100 Manifold Flange; Tee	JM0035116
4	Manifold Gasket for M200 Fittings	JM0021145
5	2" Full Port Manifold x 2" Manifold Flange Reducer Coupling	JM0035131
6	3/4" Hose Clamp SS	JM0039205
7	M100 Manifold Flange x 3/4" Hose Barb; 90 Degree	JM0032501
8	Manifold Flange Clamp for M100 Fittings	JM0032496
9	Manifold Gasket for M100 Fittings with Rib	JM0035239
10	Manifold Plug for M200 Fittings with 1/4" NPT for Gauge	JM0021147
11	Manifold Flange Clamp for M200 Fittings	JM0035251
12	Raven Boom Valve	JM0032478
13	Top Tongue Raven Mounting Bracket	JM0054334
14	M200 Manifold Flange x M200 Manifold Flange x M200 Manifold Flange; Tee	JM0021140
15	Manifold Plug for M200 Fittings	JM0021146
16	Raven Flow Meter M220 Manifold Flange (RFM100P)	JM0038727
17	Manifold Gasket for M220 Fittings	JM0035278
18	Manifold Flange Clamp for M220	JM0035238
19	100psi Spike Valve with M100 Manifold Flanges	JM0032499
20	3/8"-16 x 1" Gr5 Z SF Hex Bolt	JM0002092
21	3/8"-16 Gr5 Z SF Hex Nut	JM0002152
22	1/4" ID, 3/4" OD Z Flat Washer	JM0003090
23	1/4"-20 x 3/4" Gr5 Z Hex Bolt	JM0001507

Parallel Linkage for Toolbar Height Adjustment

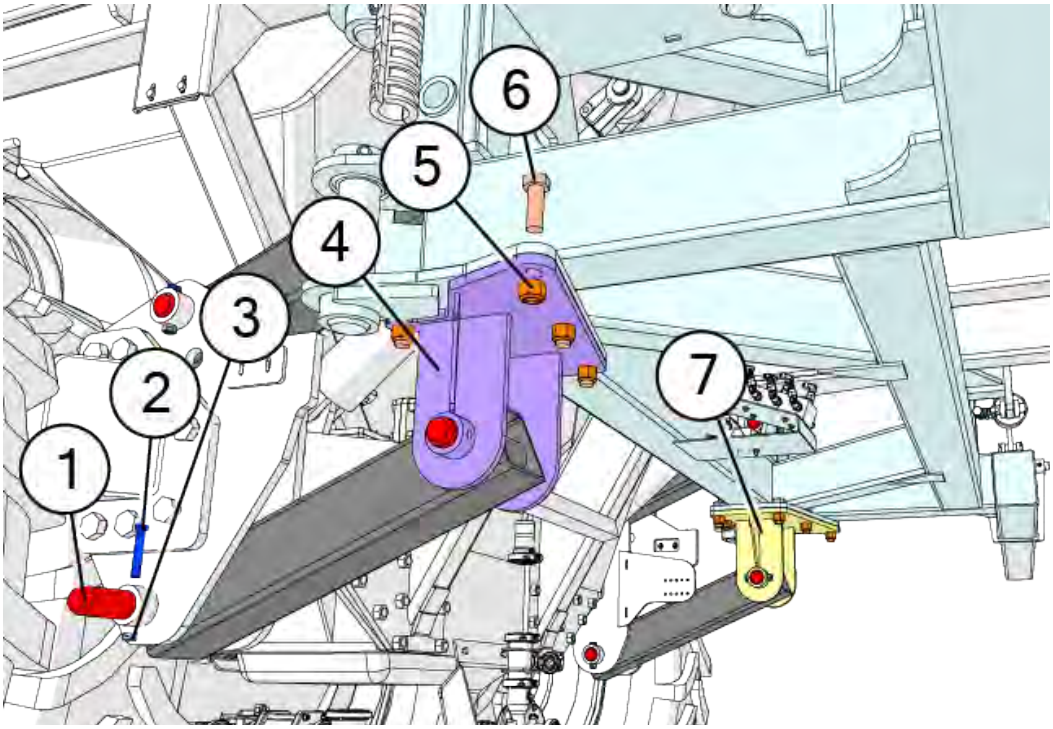

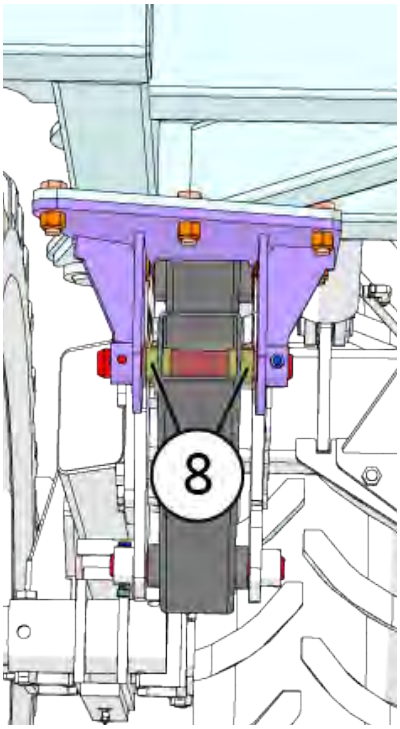

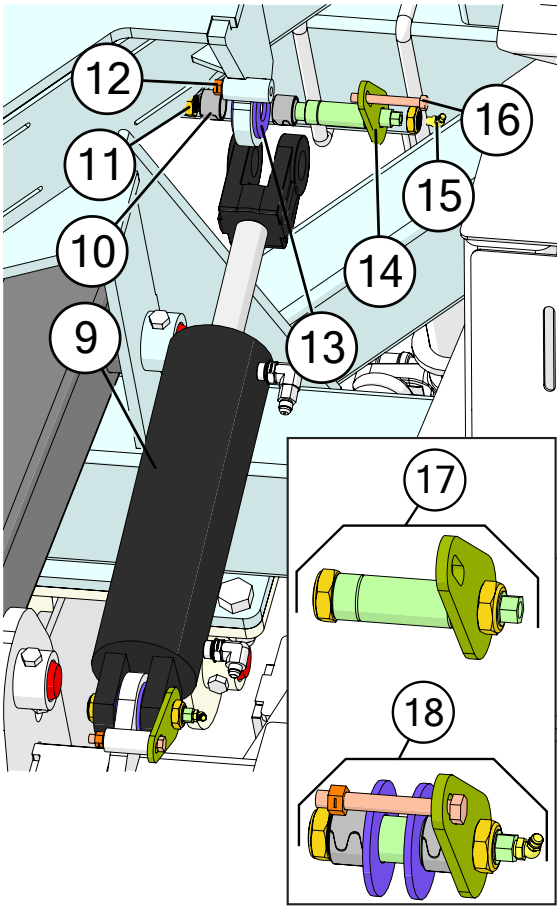

	Description	Part No.
1	11-1/4" Clevis Pin (1-3/4" Diameter)	JM0045307
2	1/2"-13 x 3" Gr5 Z Hex Bolt	JM0016678
3	1/2"-13 Gr2 Z Centerlock Hex Nut	JM0001511
4	Toolbar to Frame Connection Weldment (Passenger Side)	JM0050119
5	7/8"-14 GrC Z Distorted Thread Hex Nut	JM0075662
6	7/8"-14 x 2-1/2" Gr8 YZ Hex Bolt	JM0059217
7	Toolbar to Frame Connection Weldment (Driver Side)	JM0050665
8	1-3/4" ID x 2" OD x 1-1/2" Sleeve Composite Bushing	JM0030328
9	4" Bore, 12" Stroke Welded Hydraulic Cylinder	JM0045585
10	1.25OD X 1.0ID X 0.875L Hardened Steel Bushing	JM0077805
11	3/4"-16 Grade 8 High-Strength Steel Thin (Jam) Nylon-Insert Locknut	JM0077584
12	3/8"-16 Gr2 Z Centerlock Hex Nut	JM0001512
13	1" USS Flat Washer	JM0003063
14	6000 Seriers Main Lift Pin Retainer	JM0078867
15	1/8" NPT Male 65 Degree Elbow Grease Fitting	JM0050602
16	3/8"-16 x 3" Gr8 Z Hex Bolt	JM0077815
17	6000 Series Main Lift Hardened Pin 4-1/2" with Keeper and Nuts	JM0078868
18	6000 Series Main Lift Hardened Pin 4-1/2" Main Assembly (Nuts, Bushings, Washers)	JM0077814

Hand Wash Tank

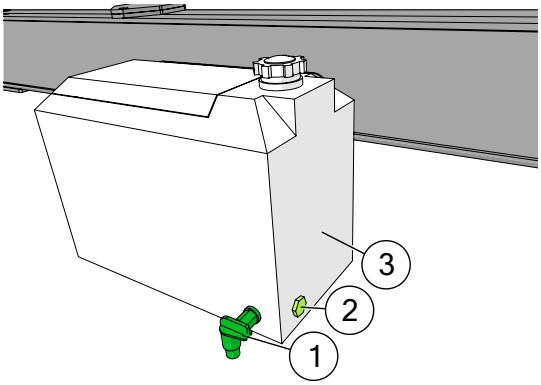

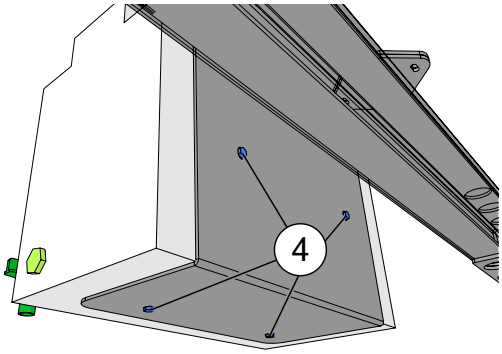

	Description	Part No.
1	9 Gallon Safety/Fresh Water Tank	JM0030587
2	3/4" NPT PVC Threaded Plug Schedule 40 (NitroGro)	JM0037251
3	Drum Faucet - 3/4" NPT	JM0039066
4	5/16"-18 x 1/2" Gr5 Z Hex Bolt	JM0016674

Check Valve

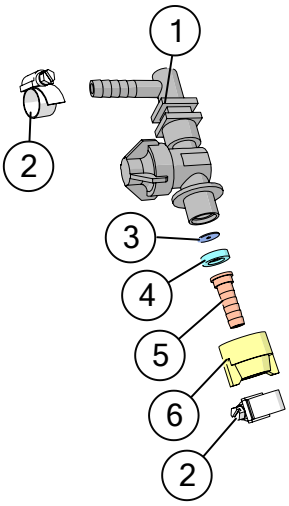

	Description	Part No.
1	Diaphragm Check Valve 3/8" Hose Single	JM0036383
2	3/8" Hose Clamp SS	JM0039206
3	.054 NitroGro Orifice	JM0036373
3	.075 NitroGro Orifice	JM0036374
3	.093 NitroGro Orifice	JM0036375
3	.107 NitroGro Orifice	JM0036376
3	.132 NitroGro Orifice	JM0036377
3	.162 NitroGro Orifice	JM0036378
3	.196 NitroGro Orifice	JM0051020
4	NitroGro Check Valve Seat Gasket	JM0036372
5	3/8" Hose Barb, Poly	JM0036368
6	Quickjet Cap, Black	JM0036371

Slow Moving Vehicle Sign

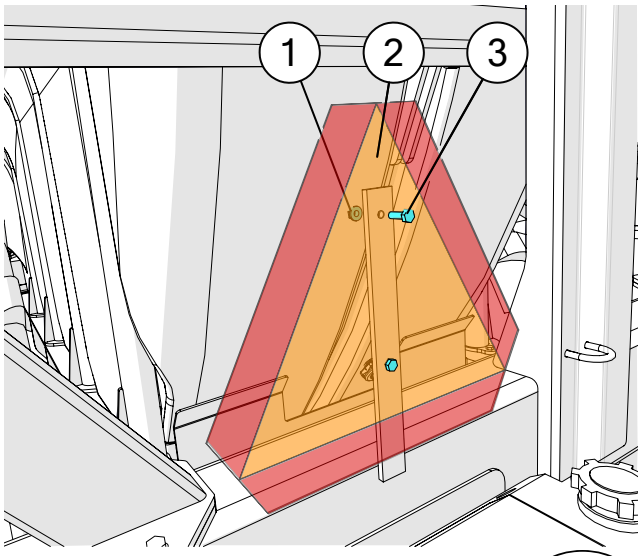

	Description	Part No.
1	1/4"-20 Gr5 Z SF Hex Nut	JM0001630
2	Slow Moving Vehicle Sign	JM0001616
3	1/4"-20 x 3/4" Gr5 Z Hex Bolt	JM0001507

Coulter Mounts

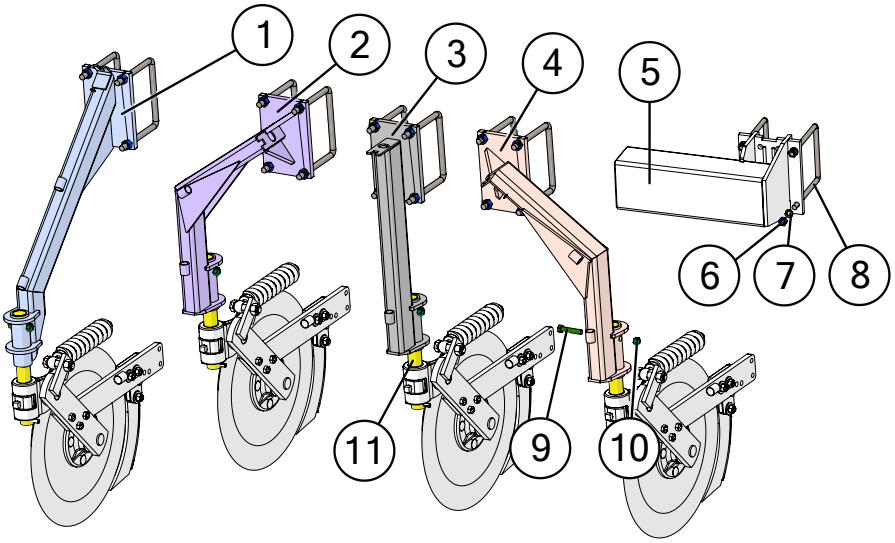

	Description	Part No.
1	Forward Offset Coulter Mount Weldment (NitroGro 6000 Series)	JM0047336
2	Right Offset Coulter Mount Weldment (NitroGro 6000 Series)	JM0047869
3	Standard Coulter Mount Weldment (NitroGro 6000 Series)	JM0036909
4	Left Offset Coulter Mount Weldment (NitroGro 6000 Series)	JM0047867
5	Offset Mount Weldment for Coulters (NitroGro 6000 Series)	JM0058654
6	5/8"-11 Gr5 Z SF Hex Nut	JM0002151
7	5/8" Gr2 Z Lock Washer	JM0051157
8	5/8"-11 x 7-1/8" x 7" Square U-Bolt	JM0043200
9	1/2"-13 x 2-1/2" Gr5 Z Hex Bolt	JM0001648
10	1/2"-13 Gr2 Z Centerlock Hex Nut	JM0001511
11	Shaft 13" - Coulter Mount	JM0043034
11	13" Shaft - Para-Linkage Coulter Mount	JM0049094

Coulter Blade and Hub Assembly

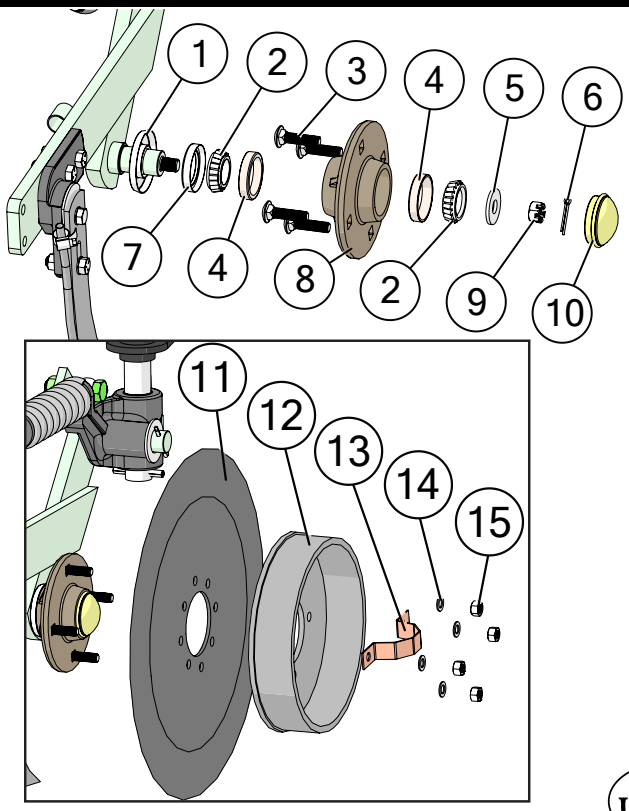

	Description	Part No.
1	Seal Protector for GEP Coulter	JM0038267
2	Small Outer Cone for 6-10 Ton (LM67048)	JM0019564
3	1/2 "-13 x 2" Gr2 Z Carriage Bolt	JM0038410
4	LM67010 Cup (Small Race for 6-10 ton)(200500)	JM0026564
5	Hub Washer for GEP Coulter	JM0038278
6	Cotter Pin 1/8" Diameter x 1-1/2" Length	JM0004177
7	Grease Seal for GEP Coulter Hub	JM0038287
8	Hub for GEP Coulter	JM0038285
9	5/8"-18 Castle Nut	JM0049457
10	Dust Cap for GEP Coulter	JM0038288
11	20" Straight Coulter Blade with Ripple	JM0031269
11	20" Wavy Coulter Blade (5/8" Wave)	JM0038506
12	GC5000 Depth Control Spool	JM0031281
13	Dust Cap Keeper for GEP Coulter	JM0038391
14	1/2" Gr2 Z Lock Washer	JM0019021
15	1/2"-13 Gr2 Z Hex Nut	JM0002124

GEP Coulter Assembly

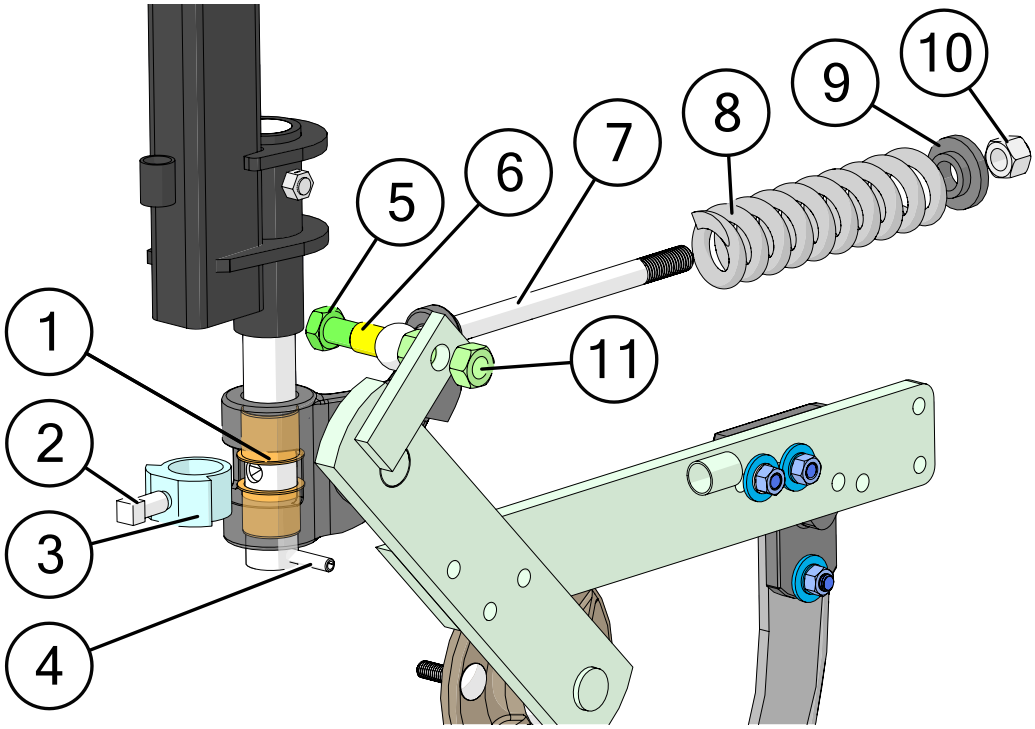

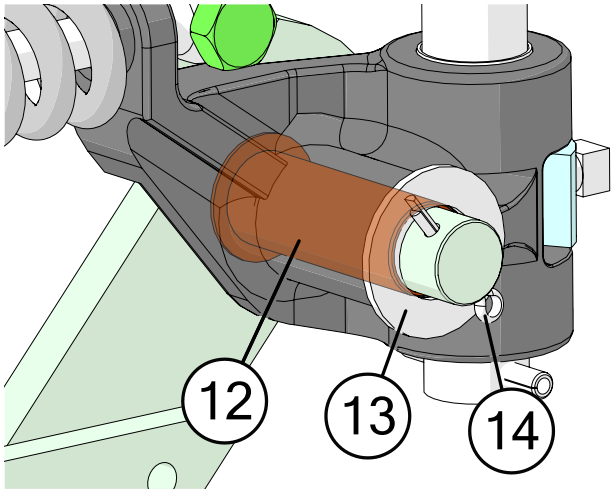

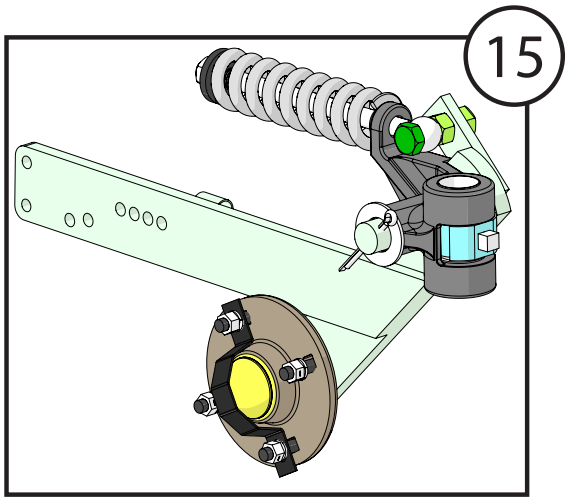

	Description	Part No.
1	Shaft Nylon Bushing (GEP Coulter)	JM0038258
2	5/8"-11 x 1" Square Head Bolt	JM0037259
3	Lock Collar - 30 Degrees Rotation (Standard)	JM0031280
4	3/8" x 3" SS Roll Pin	JM0037162
5	3/4"-10 x 3" Gr5 Z Hex Bolt	JM0019201
6	Nylon Spring Bushing 3/4" ID x 7/8" OD x 1-5/32"	JM0038264
7	Spring Rod for GEP Coulter	JM0038265
8	Spring for GEP Coulter	JM0038269
9	Spring Alignment Cast Washer for GEP Coulter	JM0038270
10	3/4"-10 Gr2 Z Nylon Locking Hex Nut	JM0026756
11	3/4"-10 Gr2 Z Hex Nut	JM0002125
12	Nylon Bushing with Flange 1-1/4" ID x 3-5/8" (GEP)	JM0038259
13	1-3/8" ID, 2-1/2" OD Washer	JM0038272
14	Cotter Pin 3/16" Diameter x 2" Long	JM0038266
15	GEP Coulter Knuckle, Arm, and Hub Assembly	JM0031265

GEP Coulter Knife Assembly

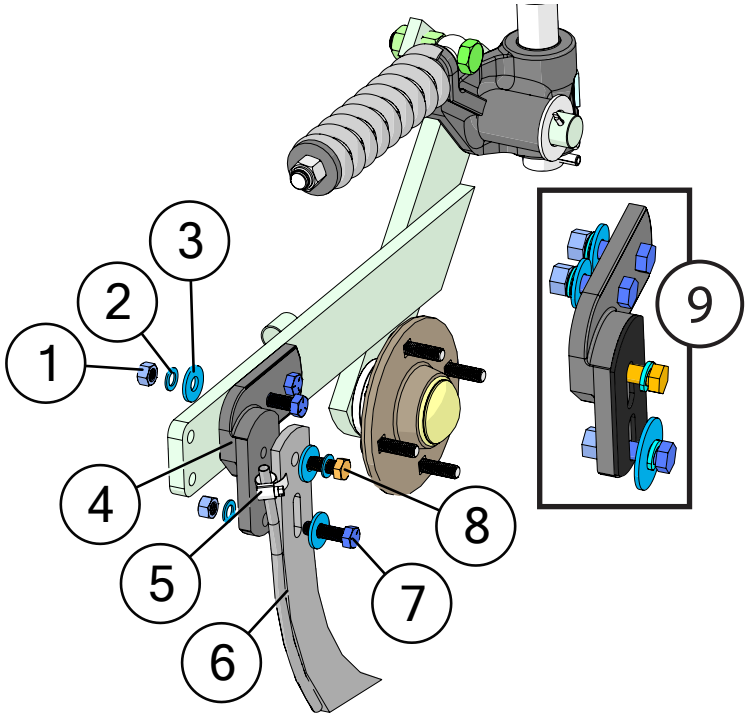

	Description	Part No.
1	1/2"-13 Gr2 Z Hex Nut	JM0002124
2	1/2" Gr2 Z Lock Washer	JM0019021
3	1/2" ID, 1-3/8" OD Z Flat Washer	JM0003082
4	Grove Knife Bracket Weldment	JM0059364
5	3/8" Hose Clamp SS	JM0039206
6	C050 Wiese Knife	JM0031273
7	1/2"-13 x 1-3/4" Gr5 Z Hex Bolt	JM0002101
8	1/2"-13 x 1-1/4" Gr5 Z Hex Bolt	JM0001513
9	Coulter Knife Bracket Package	JM0041705

Coulter Injector Assembly

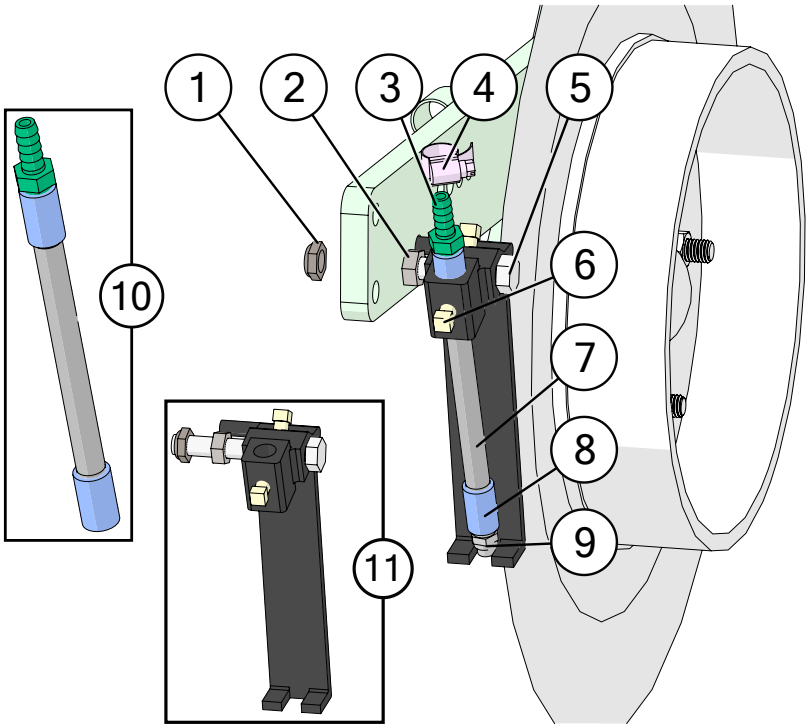

	Description	Part No.
1	1/2"-13 SS Nylon Locking Hex Jam Nut	JM0041792
2	1/2"-13 SS Hex Jam Nut	JM0041791
3	3/8" Hose Barb x 1/4" Male NPT SS	JM0036419
4	3/8" Hose Clamp SS	JM0039206
5	1/2"-13 x 3-1/2" SS Hex Bolt	JM0041790
6	3/8"-16 x 1/2" Square Head SS Bolt	JM0041793
7	6" SS Pipe with 1/4" Male NPT Fittings	JM0036445
8	1/4" NPT Merchant Coupling SS	JM0036441
9	#8 NitroGro Injector	JM0036457
9	#10 NitroGro Injector	JM0036459
9	#15 NitroGro Injector	JM0036460
9	#20 NitroGro Injector	JM0036462
9	#30 NitroGro Injector	JM0036463
9	#40 NitroGro Injector	JM0036464
9	#60 NitroGro Injector	JM0051069
10	Fertilizer Injector With Fittings	JM0041788
11	Injector Mount and Bolt Kit	JM0074341
12	Para-Linkage Coulter Knife/Injector Mount	JM0049010
13	1/2"-13 x 1-3/4" Gr5 Z Hex Bolt	JM0002101
14	1/2"-13 Gr5 Z SF Hex Nut	JM0002153

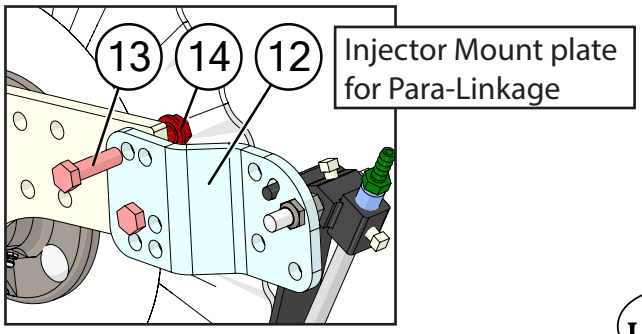

J&M Para-Linkage Coulter

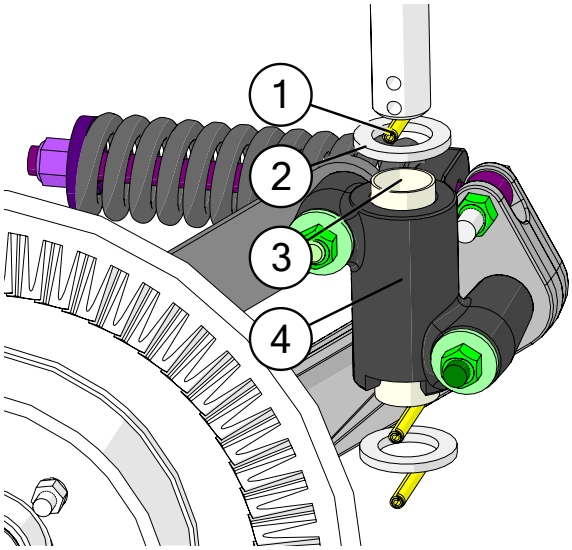

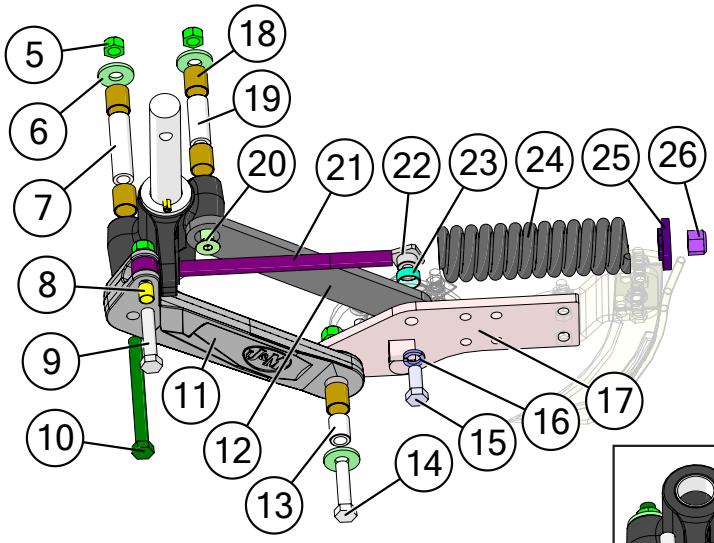

	Description	Part No.
1	3/8" x 2-1/2" SS Spirol Coiled Spring Pin 420SS HD	JM0061533
2	Para-Linkage Coulter Mount Washer	JM0049034
3	1-1/2" ID x 1-5/8 OD x 1" Length Sleeve Composite Bearing	JM0048949
4	ParaLinkage Main body - Cast	JM0051522
5	5/8"-11 GrC Z Distorted Thread Hex Nut	JM0054594
6	5/8" USS Hardened YZ Thick Flat Washer	JM0062183
7	Para-Linkage Lower Arm Bushing Pivot	JM0051220
8	5/8" ID x 23/32" OD x 3/4" Length Sleeve Composite Bearing	JM0048955
9	5/8"-11 x 3" Gr5 Z Hex Bolt	JM0002105
10	5/8"-11 x 6-1/2" Gr8 YZ Hex Bolt	JM0050351
11	ParaLinkage Cast Arm	JM0051530
12	Para-Linkage Top Arm	JM0048940
13	Bottom Arm Para-Linkage Pivot	JM0051160
14	5/8"-11 x 2-3/4" Gr8 YZ Hex Bolt	JM0061683
15	5/8"-11 x 1-1/2" Gr5 Z Hex Bolt	JM0002103
16	5/8" Gr2 Z Lock Washer	JM0051157
17	Para-Linkage Spindle Mount Weldment	JM0048970
18	1" ID x 1-1/4" OD x 1-1/4" Length Sleeve Composite Bearing	JM0051195
19	Para-Linkage Top Arm Bushing Pivot	JM0051219
20	5/8"-11 x 4" Flat Head Socket Cap Screw	JM0048980
21	Para-Linkage Coulter Spring Rod	JM0049484
22	1" ID x 1-1/8" OD x 1/2" Length Sleeve Composite Bearing	JM0051196
23	Top Arm Para-Linkage Pivot	JM0051159
24	0.562" Wire x 2-3/4" OD x 9-1/4" Length Compression Spring	JM0048712
25	Para-Linkage Coulter Spring Washer Weldment	JM0048967
26	3/4"-10 Gr2 Z Nylon Locking Hex Nut	JM0026756
27	ParaLinkage Main Unit Assembly	JM0077547

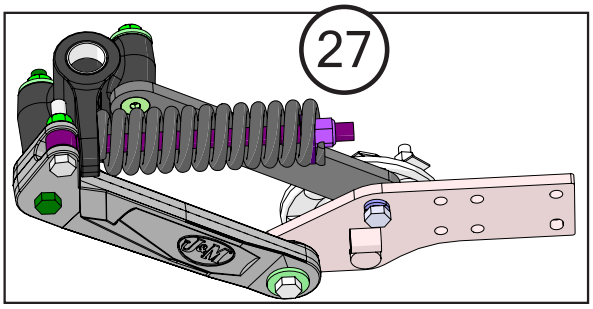

J&M Para-Linkage Coulter Rod Assembly

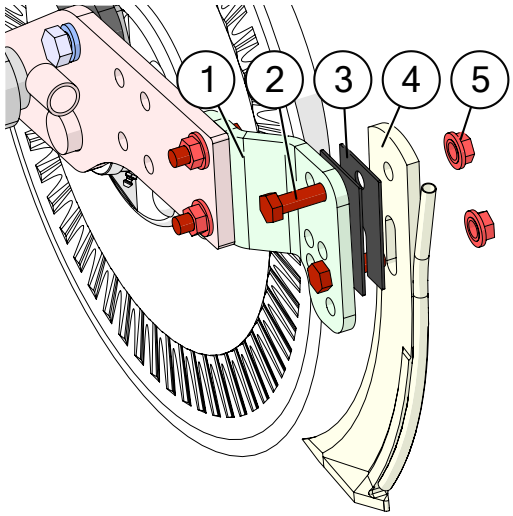

	Description	Part No.
1	Para-Linkage Coulter Knife/Injector Mount	JM0049010
2	1/2"-13 x 1-3/4" Gr5 Z Hex Bolt	JM0002101
3	Knife Mount Spacer - .08"	JM0049033
4	C050 Wiese Knife	JM0031273
5	1/2"-13 Gr5 Z SF Hex Nut	JM0002153

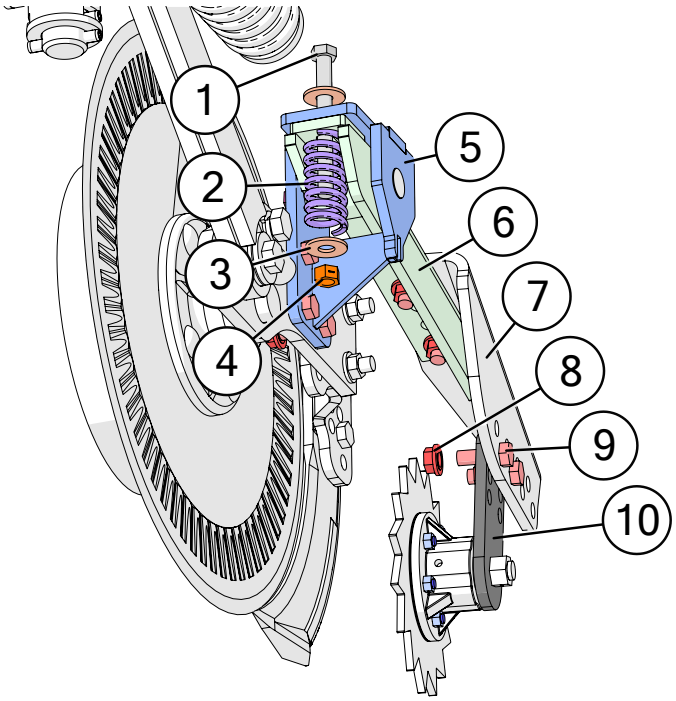

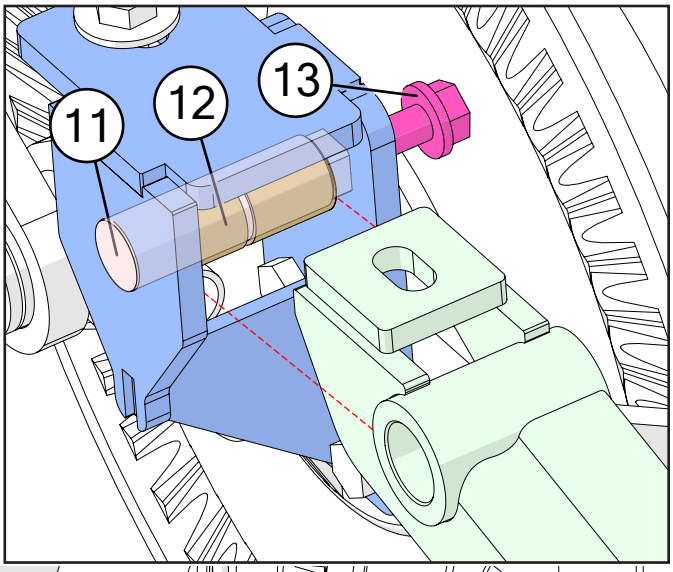

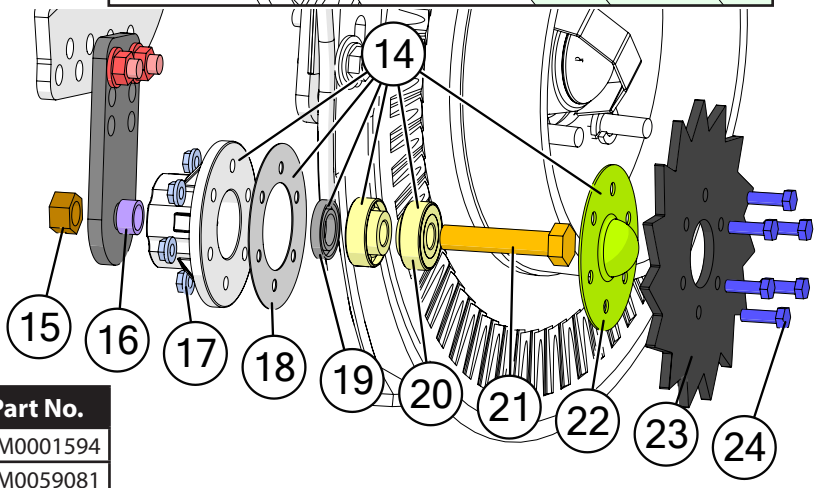

	Description	Part No.
1	1/2"-13 x 5" Gr5 Z Hex Bolt	JM0001594
2	0.256" Wire x 1-1/2" OD x 3-1/4" Length Compression Spring	JM0059081
3	1/2" ID, 1-3/8" OD Z Flat Washer	JM0003082
4	1/2"-13 Gr2 Z Centerlock Hex Nut	JM0001511
5	Gooseneck Spring Loaded Closer Base Weldment	JM0062117
6	Gooseneck Spring Loaded Closer Arm	JM0062118
7	Spring Loaded Closer Adjustable Pitch Plate	JM0062275
8	1/2"-13 Gr5 Z SF Hex Nut	JM0002153
9	1/2"-13 x 1-1/2" Gr5 Z Hex Bolt	JM0002100
10	Spring Lever Arm - Coulter Mount	JM0062277
11	Gooseneck Closer Mounting Pin	JM0062721
12	1" ID x 1-1/4" OD x 1-1/4" Length Sleeve Composite Bearing	JM0051195
13	1/2"-13 x 1-1/4" Gr5 Z SF Hex Bolt	JM0010002
14	G63204 Hub, 6 Hole on 3" Center	JM0049394
15	5/8"-11 Gr2 Z Centerlock Hex Nut	JM0002146
16	Row Closer Hub Spacer	JM0049396
17	5/16"-18 Gr5 Z SF Hex Nut	JM0014049
18	Gasket for G63204 Hub	JM0049390
19	Seal for G63204 Hub	JM0049388
20	G63204 Hub Bushing - Radial Ball Bearing	JM0049389
21	5/8"-11 x 3" Gr5 Z Hex Bolt	JM0002105
22	Hub Cap for G63204 Hub	JM0049391
23	Spike Closing Wheel	JM0062391
24	5/16"-18 x 1" Gr5 Z Hex Bolt	JM0001743
25	Gooseneck Spring Loaded Closer Assembly	JM0062133

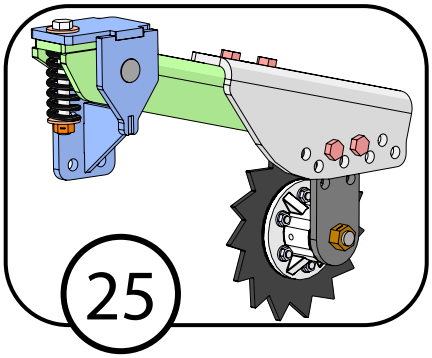

Flow Monitor

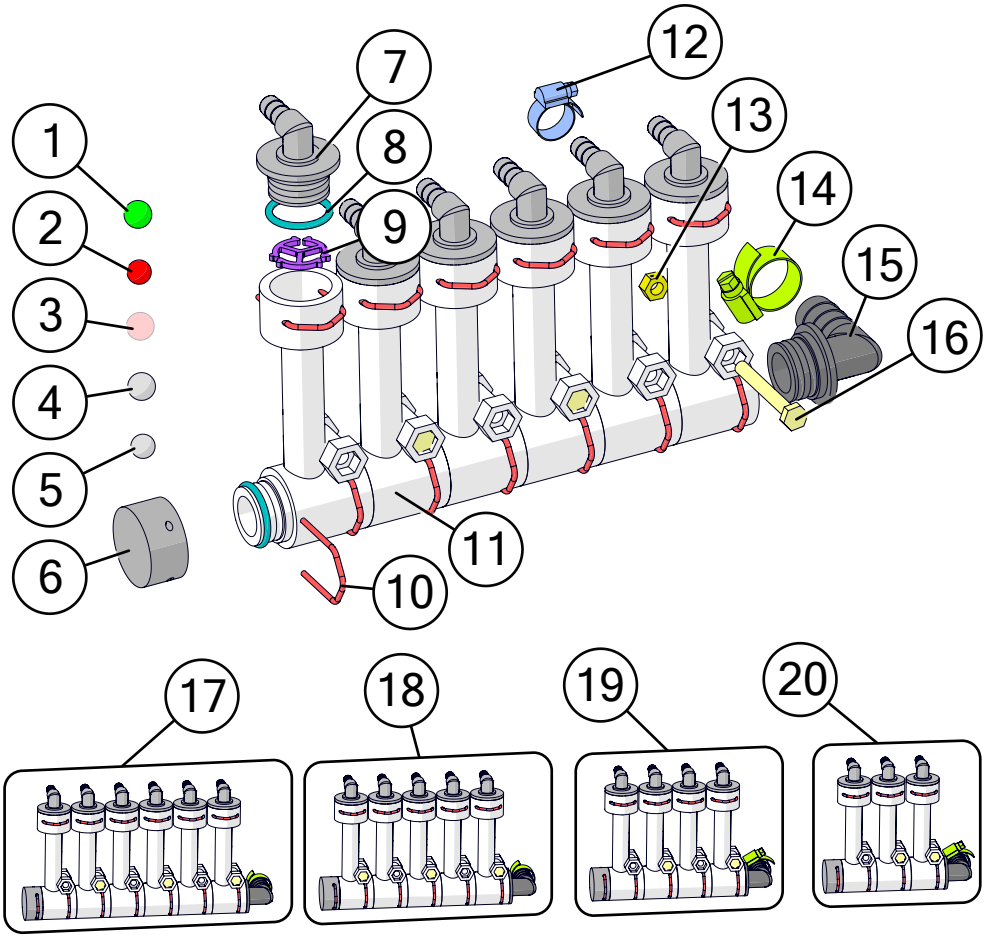

	Description	Part No.
1	Green Polyurethane Ball for Wilger Flow Indicator	JM0055003
2	Red Polyurethane Ball for Wilger Flow Indicator	JM0055004
3	Red Glass Ball for Wilger Flow Indicator	JM0055005
4	1/2" SS Ball for Wilger Flow Indicator	JM0055006
5	7/16" Stainless Steel Ball for Wilger Flow Indicator	JM0061580
6	Cap with O-Ring - Wilger Flow Indicator	JM0021579
7	3/8" Hose Barb with O-Ring; 90 Degree	JM0024469
8	O-Ring Seal for Wilger Flow Monitor	JM0055001
9	Ball Retainer for Wilger Flow Monitor	JM0055002
10	U-Clip for Wilger Flow Monitor	JM0055000
11	Wilger Flow Indicator	JM0021569
12	3/8" Hose Clamp SS	JM0039206
13	1/4"-20 Gr5 Z SF Hex Nut	JM0001630
14	3/4" Hose Clamp SS	JM0039205
15	3/4" Hose Barb with O-Ring; 90 Degree	JM0024468
16	1/4"-20 x 2" Gr5 Z Hex Bolt	JM0001591
17	Wilger Flow Indicator Manifold - 6 Row with 3/4" Inlet and 3/8" Outlets	JM0024470
18	Wilger Flow Indicator Manifold - 5 Row with 3/4" Inlet and 3/8" Outlets	JM0021591
19	Wilger Flow Indicator Manifold - 4 Row with 3/4" Inlet and 3/8" Outlets	JM0039279
20	Wilger Flow Indicator Manifold - 3 Row with 3/4" Inlet and 3/8" Outlets	JM0039280

Flow Monitor Mount and Sight Glasses

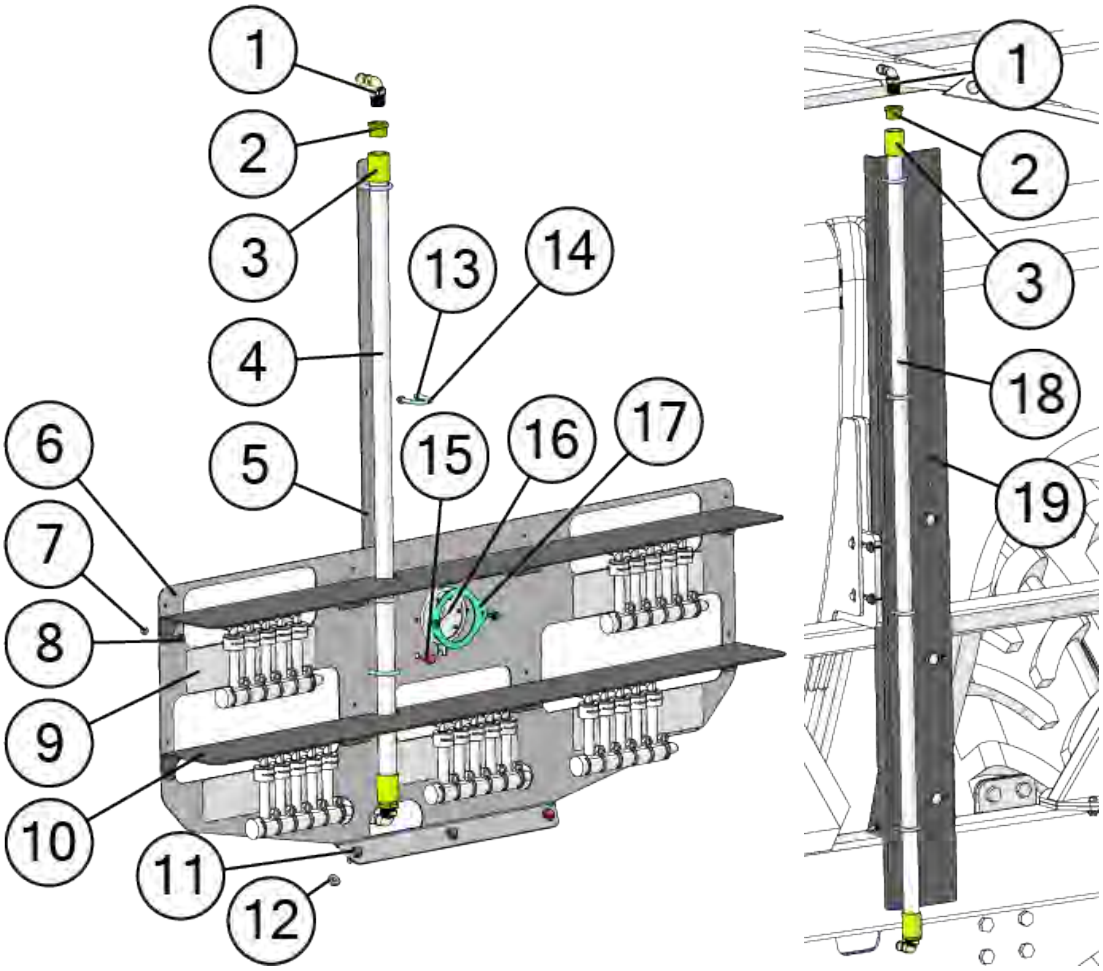

	Description	Part No.
1	3/4" Hose Barb x 3/4" Male NPT; 90 Deg	JM0035226
2	1" Male x 3/4" Female PVC Hex Bushing - Black	JM0047864
3	1" Slip x 1" FIPT PVC - Black	JM0047865
4	1" Clear PVC Pipe - Front Sight Glass - 6026 - 65-5/8"	JM0047604
5	2600 Gallon Tank Front Sight Glass Bracket	JM0054252
6	6000 Applicator Flow Monitor Mounting Plate	JM0058929
7	1/4"-20 Gr5 Z SF Hex Nut	JM0001630
8	1/4"-20 x 3/4" Gr5 Z SF Hex Bolt	JM0001642
9	Flow Monitor Ball Decal - WHITE	JM0054966
10	6000 Applicator Flow Monitor Mounting Plate - Hood	JM0054506
11	3/8"-16 x 1" Gr5 Z SF Hex Bolt	JM0002092
12	3/8"-16 Gr5 Z SF Hex Nut	JM0002152
13	5/16"-18 Gr2 Z Centerlock Hex Nut	JM0002143
14	5/16" Round U-Bolt 1" Pipe Size	JM0047616
15	3/8"-16 x 3/4" Gr5 Z SF Hex Bolt	JM0001750
16	Pressure Gauge Stainless Steel 0-100psi, 1/4" NPT	JM0036636
17	6000 Nitrogro Flow Monitor Pressure Gauge Holder	JM0051516
18	1" Clear PVC Pipe - Rear Sight Glass - 6026 - 86-1/2"	JM0047618
19	2600 Gallon Rear Sight Glass Bracket	JM0047605

Fill Valves

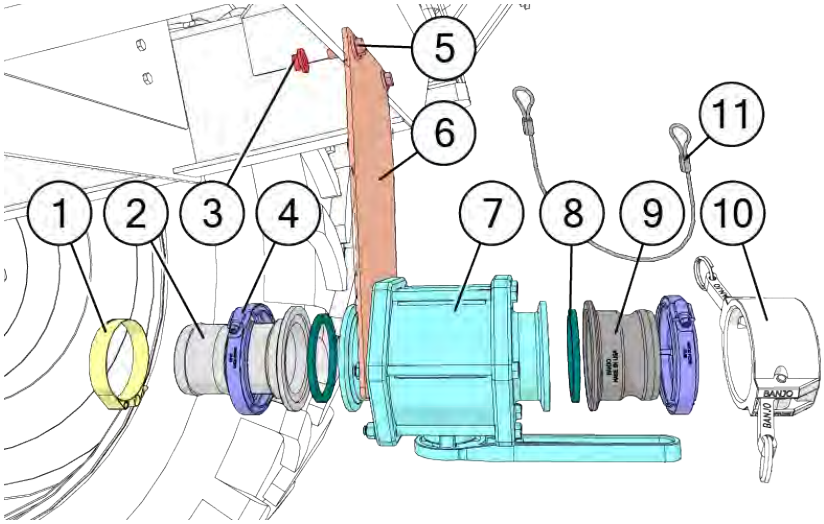

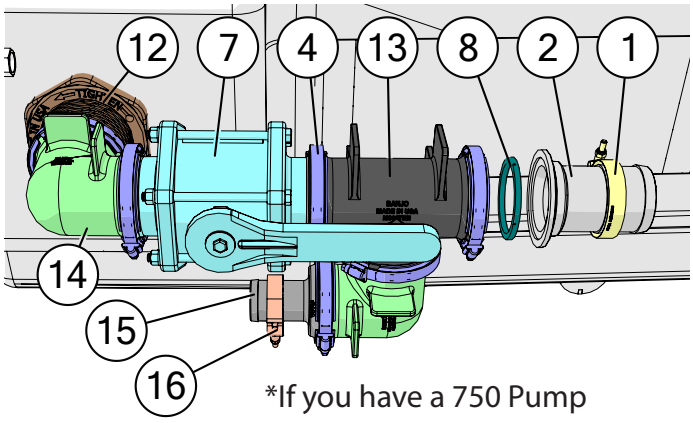

*If you have a 750 Pump use parts 1 and 2 in place of parts 15 and 16.

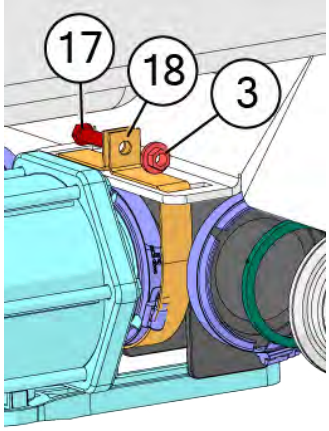

	Description	Part No.
1	T-Bolt Hose Clamp 3" Hose, 3-5/16" Min OD	JM0035248
2	3" Manifold Flange x 3" Hose Barb	JM0021244
3	3/8"-16 Gr5 Z SF Hex Nut	JM0002152
4	Manifold Flange Clamp for M300 Fittings	JM0035237
5	3/8"-16 x 1" Gr5 Z SF Hex Bolt	JM0002092
6	Ball Valve Mount Plate 3" Banjo (NitroGro)	JM0034894
7	Ball Valve - 3" Full Port Flange Manifold	JM0021230
8	Manifold Gasket for M300 Fittings with Rib	JM0021239
9	3" Manifold Flange x 3" QDC Male	JM0035205
10	3" Poly Cam Lever Cap	JM0035206
11	Cable Lanyard (NitroGro)	JM0039282
12	3" MNF x 3" FNPT Tank Fitting BTM DRN	JM0035114
13	3" Manifold Tee	JM0021232
14	M300 Manifold Flange x M300 Manifold Flange; 90 Degree	JM0033979
15	3" Manifold Flange x 2" Hose Barb	JM0034333
16	T-Bolt Hose Clamp 2" Hose, 2-5/16" Min OD	JM0035247
17	3/8"-16 x 1-1/2" Gr5 Z Hex Bolt	JM0001659
18	Auger Band	JM0016185

Hydraulic Pump Circuit Hydraulic Schematic

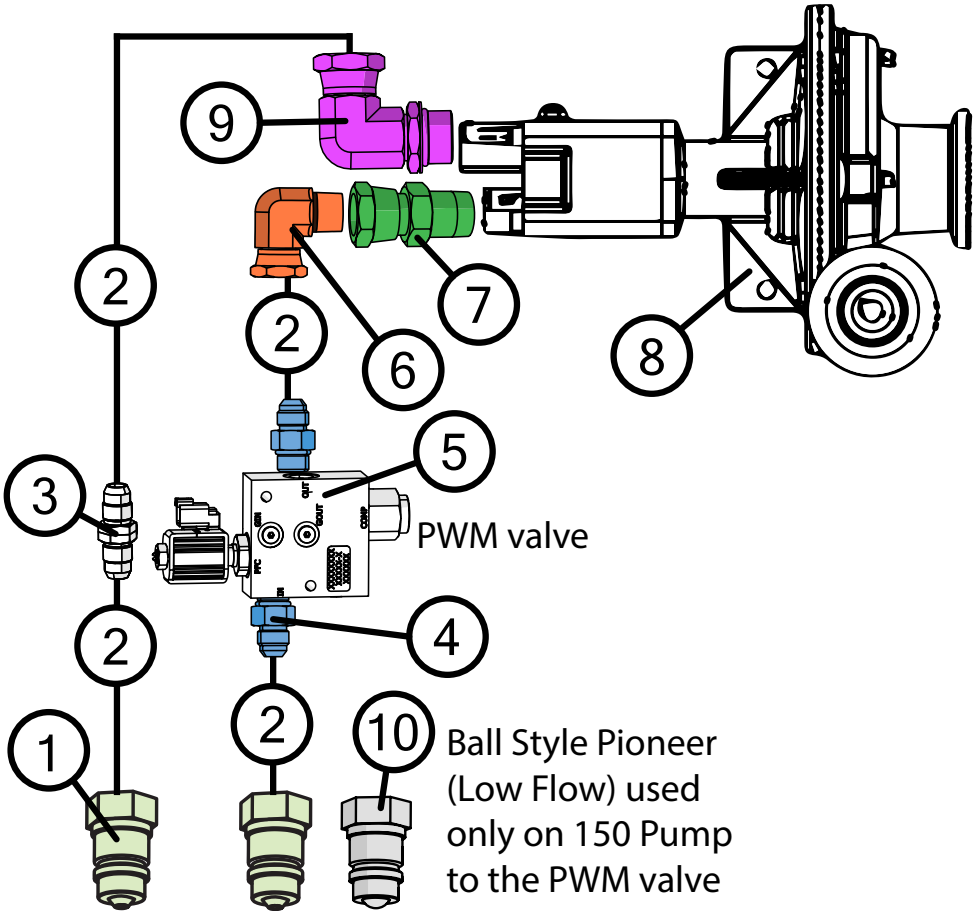

	Description	Part No.
1	1/2" Female NPT x Male Pioneer - High Flow, Cone Style	JM0018254
2	3/4" x 120" Hydraulic Hose 120inch12M3K-12G-8MP-12G-8FJX	JM0078622
3	1/2" Male JIC x 1/2" Male O-ring; Straight	JM0010293
4	1/2" Male ORB x 1/2" Female NPT Swivel; Straight	JM0026804
5	Hydraulic PWM Control Valve for Nitrogen Fertilizer Pump (F14264A1)	JM0059223
6	1/2" Male Pipe x 1/2" Female Pipe Swivel; 90° Elbow	JM0074224
7	5/8" Male O-Ring x 1/2" Female NPT Swivel; Straight	JM0074223
8	FMSC-155F-HYD-206 Ace Pump	JM0038662
8	FMC-750F-HYD-M22 Ace Pump	JM0050785
9	5/8" Male O-Ring x 1/2" Female NPT Swivel; 90 Degree Elbow	JM0061539
10	1/2" Female NPT x Male Pioneer - Low Flow, Ball Style	JM0039220

Main Wing Fold Circuit Hydraulic Schematic

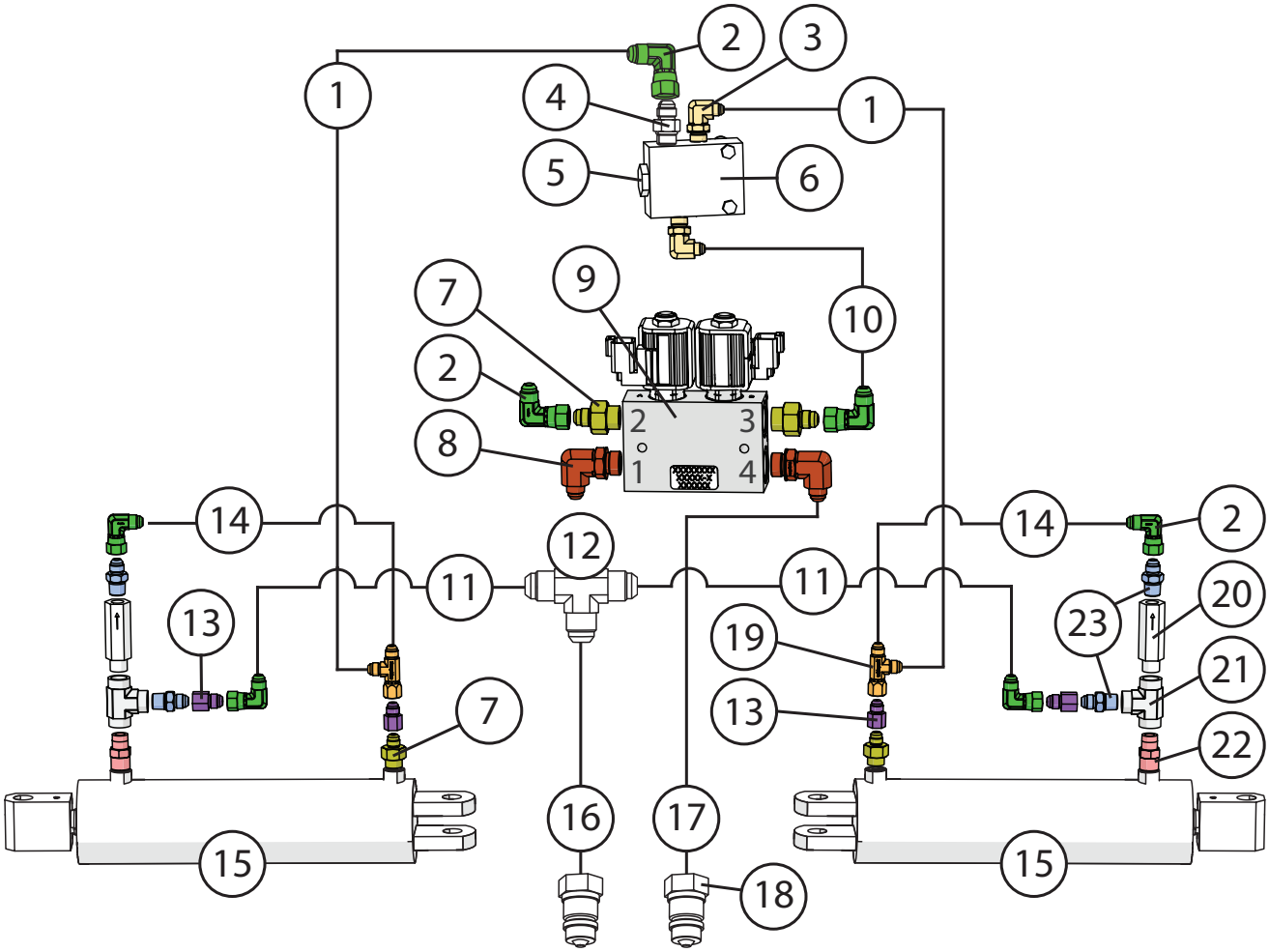

	Description	Part No.
1	3/8" x 72" Hydraulic Hose 72inch6M3K-6G-6FJX-6G-6FJX	JM0049157
2	3/8" Male JIC x 3/8" Female JIC Swivel; 90 Degree Elbow	JM0010295
3	3/8" Male JIC x 3/8" Male ORB; 90 Degree Elbow	JM0026121
4	3/8" Male JIC x 3/8" Male ORB; Straight	JM0043614
5	3/8" Male NPT Plug	JM0018261
6	50 by 50 Flow Divider Valve	JM0047737
7	3/8" Male JIC x 1/2" Male ORB; Straight	JM0010302
8	3/8" Male JIC x 1/2" Male ORB; 90 Degree Elbow	JM0037159
9	F14424A1 Dual Solenoid Valve Assembly	JM0068890
10	3/8" x 60" Hydraulic Hose 60inch6M3K-6G-6FJX-6G-6FJX	JM0068916
11	3/8" x 85" Hydraulic Hose 85inch6M3K-6G-6FJX-6G-6FJX	JM0049158
12	3/8" Male JIC x 3/8" Male JIC x 3/8" Male JIC; Tee	JM0055046
13	1/2" Male JIC x 1/2" Female JIC - Straight with .031 Orifice	JM0054919
14	3/8" x 12" Hydraulic Hose 12inch4M3K-4G-6FPX-4G-6FJX	JM0054984
15	4" Bore, 8-1/2" Stroke Cylinder Assembly	JM0062922
16	3/8" x 192" Hydraulic Hose 192inch6M3K-6G-8MP-6G-6FJX	JM0053803
17	3/8" x 120" Hydraulic Hose 120inch6M3K-6G-8MP-6G-6FJX	JM0054982
18	1/2" Female NPT x Male Pioneer - Low Flow, Ball Style	JM0039220
19	3/8" Male JIC x 3/8" Female JIC Swivel x 3/8" Male JIC; Tee	JM0037163
20	Vonberg 2100 PSI Blowoff Valve	JM0037492
21	3/8" female NPT x 3/8" female NPT x 3/8" female NPT; Street T	JM0046965
22	3/8" Male NPT x 1/2" Male O-Ring Hex Nipple	JM0030064
23	3/8" Male JIC x 3/8" Male NPT; Straight	JM0037167

Wing Flip Circuit Hydraulic Schematic

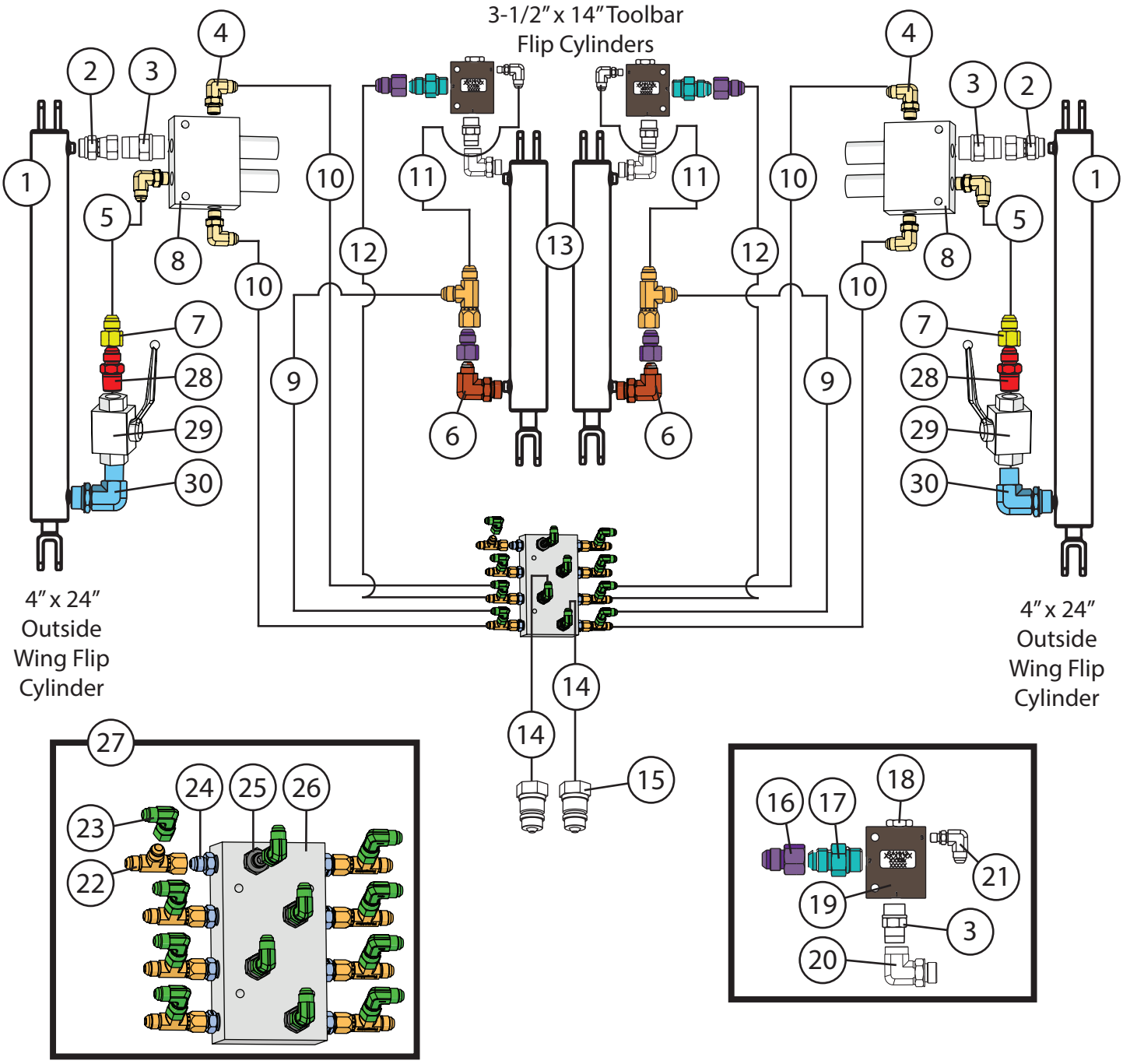

Wing Flip Circuit Hydraulic Schematic

	Description	Part No.
1	4" Bore, 24" Stroke Welded Hydraulic Cylinder - Heavier Clevises	JM0030730
1	Seal Kit for 4" x 24" Hydraulic Cylinder (JD-609)	JM0039242
2	1/2" Male ORB x 1/2" Female NPT Swivel; Straight	JM0026804
3	1/2" Male NPT x 1/2" Male O-Ring Hex Nipple	JM0048977
4	3/8" Male JIC x 3/8" Male ORB; 90 Degree Elbow	JM0026121
5	3/8" x 25" Hydraulic Hose 25inch6M3K-6G-6FJX-6G-6FJX	JM0049167
6	3/8" Male JIC x 1/2" Male ORB; 90 Degree Elbow	JM0037159
7	3/8" Male JIC x 3/8" Female JIC with .094 Orifice	JM0047735
8	Dual Counter Balance Valve	JM0047740
9	3/8" x 53" Hydraulic Hose 53inch6M3K-6G-6FJX-6G-6FJX	JM0049155
10	3/8" x 195" Hydraulic Hose 195inch6M3K-6G-6FJX-6G-6FJX	JM0049164
11	3/8" x 12" Hydraulic Hose 12inch4M3K-4G-6FPX-4G-6FJX	JM0054984
12	3/8" x 36" Hydraulic Hose 36inch6M3K-6G-6FJX-6G-6FJX	JM0049163
13	3-1/2" x 14" Welded Non-Cushion JD Cylinder	JM0055022
13	Seal Kit for 3-1/2" x 14" Hydraulic Cylinder (JD-629)	JM0074483
14	3/8" x 192" Hydraulic Hose 192inch6M3K-6G-8MP-6G-6FJX	JM0053803
15	1/2" Female NPT x Male Pioneer - Low Flow, Ball Style	JM0039220
16	3/8" Male JIC x 3/8" Female JIC with .062 Orifice	JM0047738
17	3/8" Male JIC x 1/2" Male ORB; Straight	JM0010302
18	Pilot Check Valve Hyd (FA/VBBA-5) (FA/LNL)	JM0050870
19	Pilot Operated Check Valve Body, Single Cavity, SAE Ports	JM0054912
20	1/2" Male ORB x 1/2" Female NPT Swivel; 90 Degree Elbow	JM0047392
21	3/8" Male JIC x 1/4" Male ORB; 90 Degree Elbow	JM0054921
22	3/8" Male JIC x 3/8" Female JIC Swivel x 3/8" Male JIC; Tee	JM0037163
23	3/8" Male JIC x 3/8" Female JIC Swivel; 90 Degree Elbow	JM0010295
24	3/8" Male JIC x 3/8" Male NPT; Straight	JM0037167
25	3/8" Male JIC x 1/2" Male NPT; Straight	JM0037172
26	Main Manifold Block (NitroGro)	JM0028902
27	Main 6000 Series Manifold Block with Fittings	JM0054931
28	3/8" Male JIC x 3/8" Male NPT; Straight	JM0037167
29	3/8" HP Ball Valve 7250 PSI	JM0027113
30	1/2" Male O-Ring x 3/8" Male NPT; 90 Degree Elbow	JM0041630

Down Pressure Circuit Hydraulic Schematic

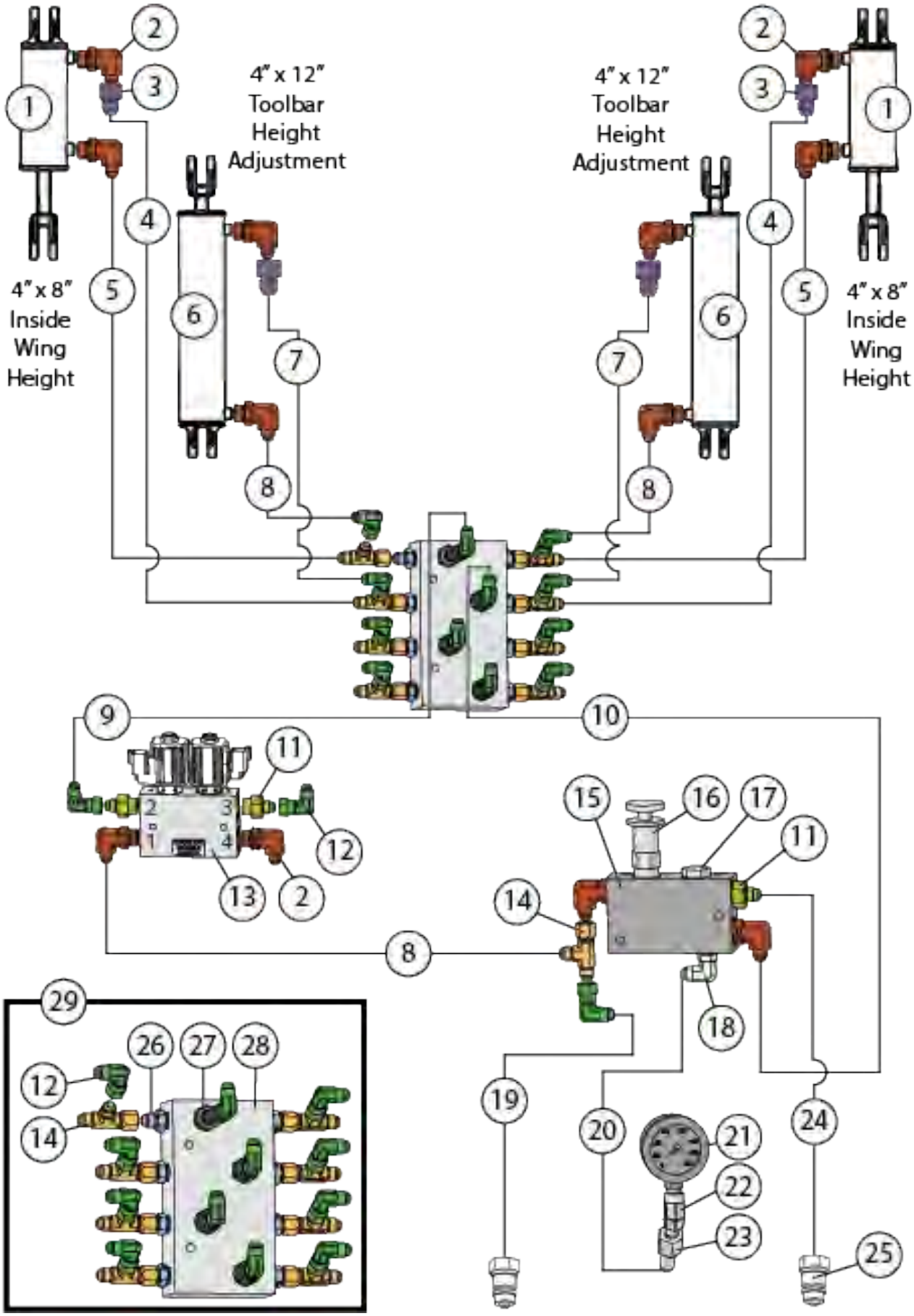

Down Pressure Circuit Hydraulic Schematic

	Description	Part No.
1	4" Bore, 8" Stroke Welded Hydraulic Cylinder - Heavier Clevises	JM0030757
1	Seal Kit for 4" x 8" Hydraulic Cylinder (JD-608)	JM0039241
2	3/8" Male JIC x 1/2" Male ORB; 90 Degree Elbow	JM0037159
3	3/8" Male JIC x 3/8" Female JIC with .094 Orifice	JM0047735
4	3/8" x 165" Hydraulic Hose 165inch6M3K-6G-6FJX-6G-6FJX	JM0049161
5	3/8" x 180" Hydraulic Hose 180inch6M3K-6G-6FJX-6G-6FJX	JM0049160
6	4" Bore, 12" Stroke Welded Hydraulic Cylinder	JM0045585
7	3/8" x 36" Hydraulic Hose 36inch6M3K-6G-6FJX-6G-6FJX	JM0049163
8	3/8" x 53" Hydraulic Hose 53inch6M3K-6G-6FJX-6G-6FJX	JM0049155
9	3/8" x 60" Hydraulic Hose 60inch6M3K-6G-6FJX-6G-6FJX	JM0068916
10	3/8" x 115" Hydraulic Hose 115inch6M3K-6G-6FJX-6G-6FJX	JM0049169
11	3/8" Male JIC x 1/2" Male ORB; Straight	JM0010302
12	3/8" Male JIC x 3/8" Female JIC Swivel; 90 Degree Elbow	JM0010295
13	F14424A1 Dual Solenoid Valve Assembly	JM0068890
14	3/8" Male JIC x 3/8" Female JIC Swivel x 3/8" Male JIC; Tee	JM0037163
15	Manifold with 1/2" ORB Ports for PRV and CV (SFP26157)	JM0034773
16	Hydraforce Pressure Reducing/Relieving Valve	JM0034800
17	Hydraforce Check Valve 5psi Bias Spring	JM0034805
18	3/8" Male JIC x 3/8" Male ORB; 90 Degree Elbow	JM0026121
19	3/8" x 87" Hydraulic Hose 87inch6M3K-6G-8MP-6G-6FJX	JM0053806
20	3/8" x 25" Hydraulic Hose 25inch6M3K-6G-6FJX-6G-6FJX	JM0049167
21	Pressure Gauge 0-1500psi, 2" Face, 1/4" NPT Bottom Mount Donaldson	JM0037152
22	1/ 4" Male NPT x 1/4" Female NPT Rigid; 45 Degree Elbow	JM0037156
23	1/4" Female NPT x 3/8" Male JIC Compression Bulk Head Fitting	JM0037155
24	3/8" x 81" Hydraulic Hose 81inch6M3K-6G-8MP-6G-6FJX	JM0049168
25	1/2" Female NPT x Male Pioneer - Low Flow, Ball Style	JM0039220
26	3/8"Male JIC x 3/8" Male NPT; Straight	JM0037167
27	3/8" Male JIC x 1/2" Male NPT; Straight	JM0037172
28	Main Manifold Block (NitroGro)	JM0028902
29	Main 6000 Series Manifold Block with Fittings	JM0054931

Fertilizer Hose Routing

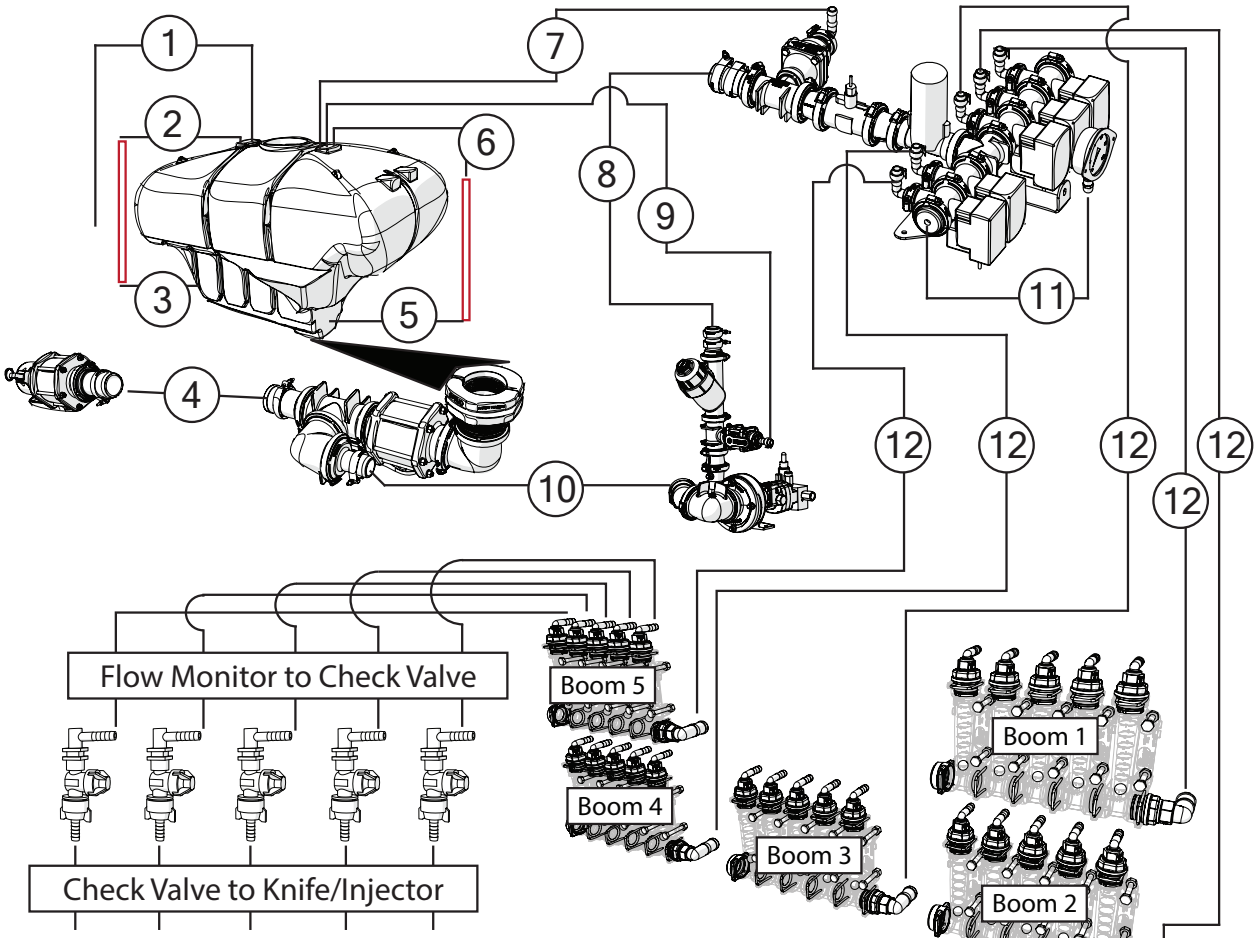

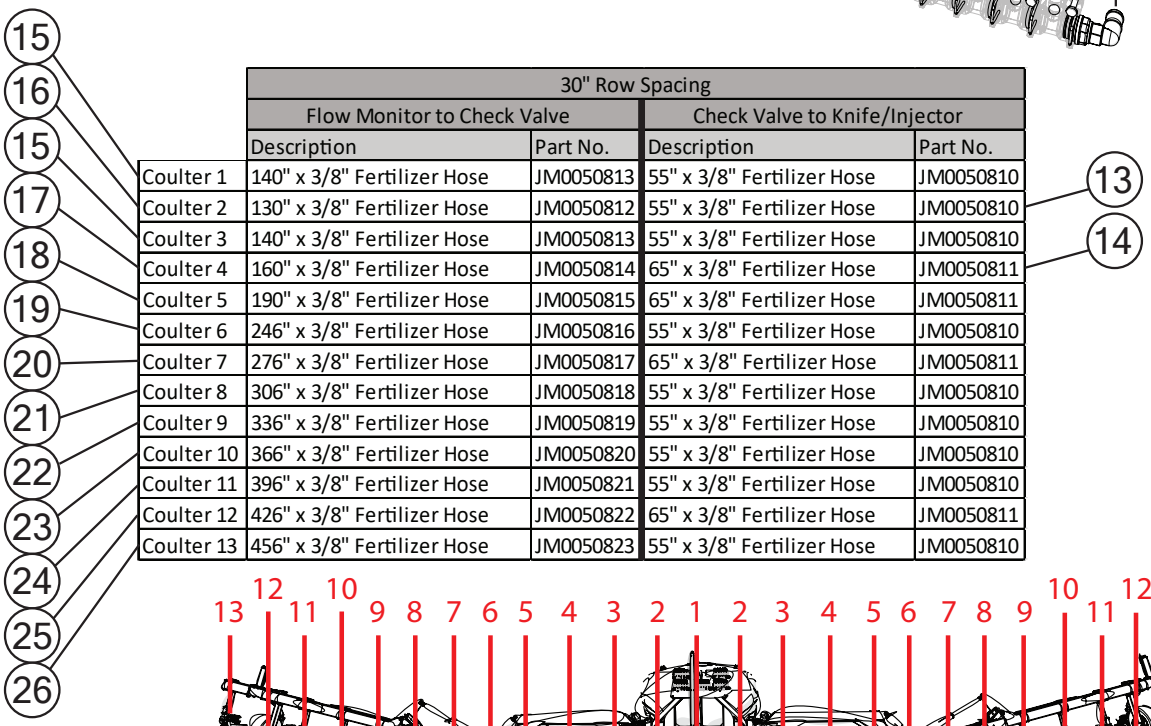

	30" Row Spacing			
	Flow Monitor to Check Valve		Check Valve to Knife/Injector	
	Description	Part No.	Description	Part No.
Coulter 1	140" x 3/8" Fertilizer Hose	JM0050813	55" x 3/8" Fertilizer Hose	JM0050810
Coulter 2	130" x 3/8" Fertilizer Hose	JM0050812	55" x 3/8" Fertilizer Hose	JM0050810
Coulter 3	140" x 3/8" Fertilizer Hose	JM0050813	55" x 3/8" Fertilizer Hose	JM0050810
Coulter 4	160" x 3/8" Fertilizer Hose	JM0050814	65" x 3/8" Fertilizer Hose	JM0050811
Coulter 5	190" x 3/8" Fertilizer Hose	JM0050815	65" x 3/8" Fertilizer Hose	JM0050811
Coulter 6	246" x 3/8" Fertilizer Hose	JM0050816	55" x 3/8" Fertilizer Hose	JM0050810
Coulter 7	276" x 3/8" Fertilizer Hose	JM0050817	65" x 3/8" Fertilizer Hose	JM0050811
Coulter 8	306" x 3/8" Fertilizer Hose	JM0050818	55" x 3/8" Fertilizer Hose	JM0050810
Coulter 9	336" x 3/8" Fertilizer Hose	JM0050819	55" x 3/8" Fertilizer Hose	JM0050810
Coulter 10	366" x 3/8" Fertilizer Hose	JM0050820	55" x 3/8" Fertilizer Hose	JM0050810
Coulter 11	396" x 3/8" Fertilizer Hose	JM0050821	55" x 3/8" Fertilizer Hose	JM0050810
Coulter 12	426" x 3/8" Fertilizer Hose	JM0050822	65" x 3/8" Fertilizer Hose	JM0050811
Coulter 13	456" x 3/8" Fertilizer Hose	JM0050823	55" x 3/8" Fertilizer Hose	JM0050810

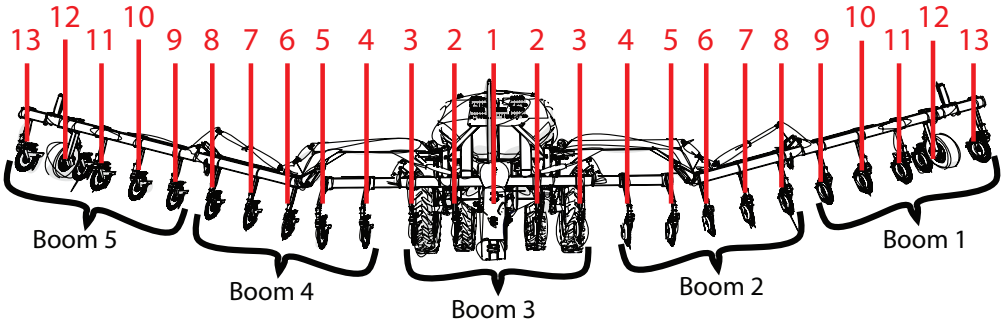

Fertilizer Hose Routing

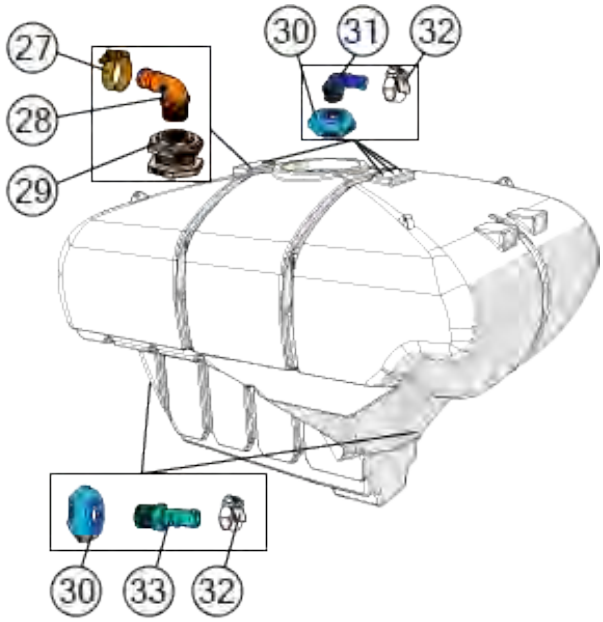

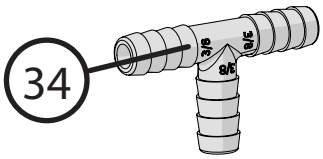

Hose barb "T" will be used if you have too many coulters. Each flow monitor will monitor 2 coulters instead of 1 in that instance.

	Description	Part No.
1	120" x 3/4" Fertilizer Hose	JM0050830
2	48" x 3/4" Fertilizer Hose	JM0050825
3	36" x 3/4" Fertilizer Hose	JM0050824
4	3" x 60" Fertilizer Suction Hose - 2600 Tank	JM0050836
5	96" x 3/4" Fertilizer Hose	JM0050826
6	60" x 3/4" Fertilizer Hose	JM0050827
7	53" x 3/4" Fertilizer Hose	JM0050829
8	2" x 96" Pump to Raven Flow Control Line	JM0050834
9	126" x 3/4" Fertilizer Hose	JM0050831
10	2" x 50" Tank to Pump Hose - 150 Pump	JM0050833
10	3" x 42" Tank to Pump Hose - 750 Pump	JM0050835
11	1/4" x 2' Hose - 1/4" Poly Fitting Each End	JM0047863
12	30" x 3/4" Fertilizer Hose	JM0050828
13	55" x 3/8" Fertilizer Hose	JM0050810
14	65" x 3/8" Fertilizer Hose	JM0050811
15	130" x 3/8" Fertilizer Hose	JM0050812
16	140" x 3/8" Fertilizer Hose	JM0050813
17	160" x 3/8" Fertilizer Hose	JM0050814
18	190" x 3/8" Fertilizer Hose	JM0050815
19	246" x 3/8" Fertilizer Hose	JM0050816
20	276" x 3/8" Fertilizer Hose	JM0050817
21	306" x 3/8" Fertilizer Hose	JM0050818
22	336" x 3/8" Fertilizer Hose	JM0050819
23	366" x 3/8" Fertilizer Hose	JM0050820
24	396" x 3/8" Fertilizer Hose	JM0050821
25	426" x 3/8" Fertilizer Hose	JM0050822
26	456" x 3/8" Fertilizer Hose	JM0050823
27	Hose Clamp - 1-13/16" Min, 2-1/16" Max	JM0021189
28	1½" Male Thread X 1½" 90° Hose Barb	JM0061527
29	1½" Poly Bulkhead Tank Fitting with EPDM Gasket	JM0061522
30	3/4" NPT Bulkhead Tank Flange Assembly	JM0035222
31	3/4" Hose Barb x 3/4" Male NPT; 90 Deg	JM0035226
32	3/4" Hose Clamp SS	JM0039205
33	3/4" Male NPT x 3/4" Hose Barb	JM0021163
34	3/8"Hose Barb Tee	JM0073958

Raven SCS 450 Liquid Control System

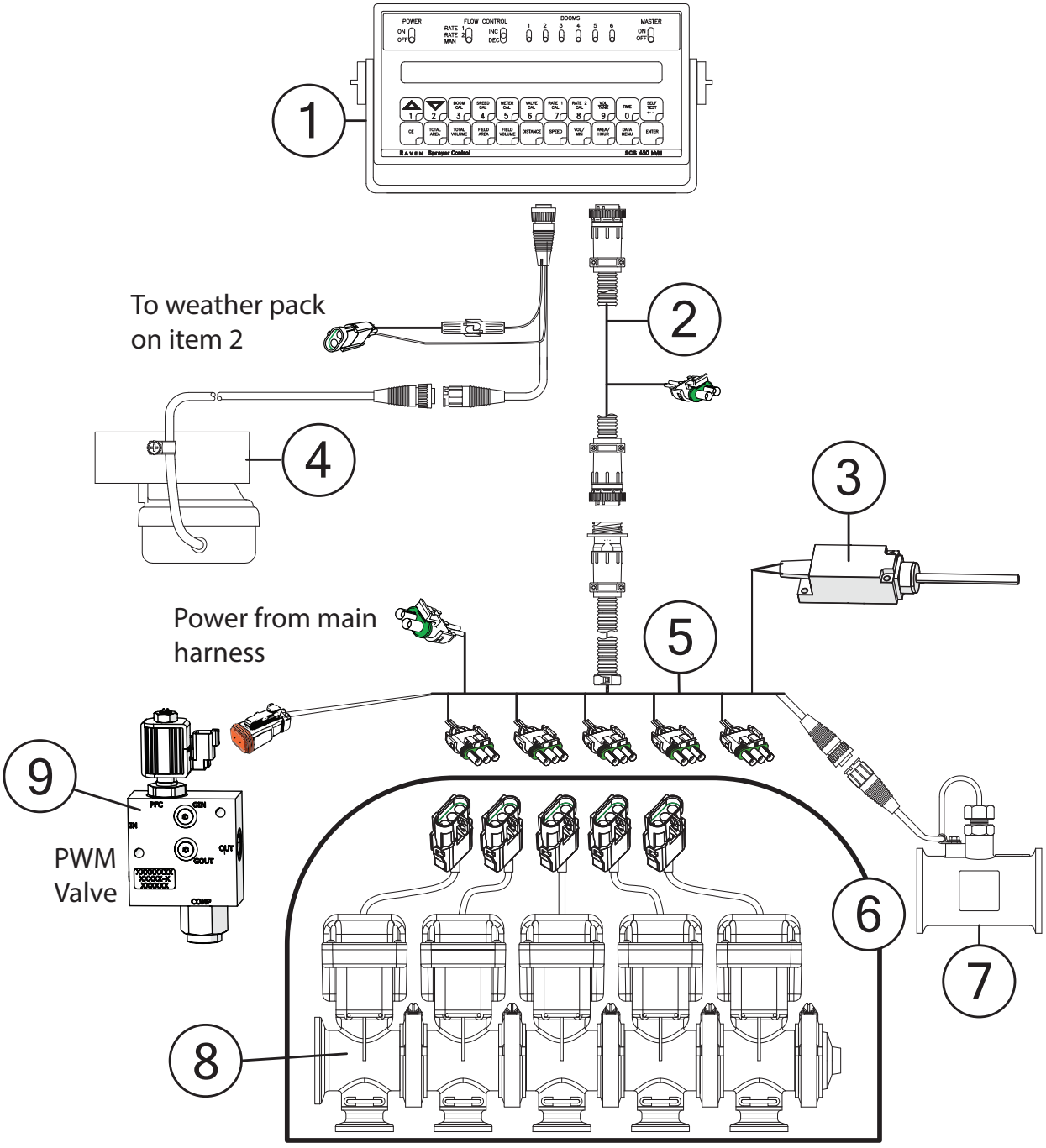

	Description	Part No.
1	Raven SCS450 Control Console	JM0039335
2	NitroGro 5 Section - PWM 30' Extension	JM0055257
3	Mini Wisker Limit Switch (12T962)	JM0050161
4	Phoenix GPS Speed Sensor	JM0039338
5	NitroGro Break Out Harness 4' (5 Boom, Limit Switch, PWM, Flow Meter, Power)	JM0055255
6	Raven 5 Section Manifold	JM0038797
7	Raven Flow Meter RFM100P M220 Manifold Flange (6000 Series)	JM0038727
8	Raven Boom Valve	JM0032478
9	Hydraulic PWM Control Valve for Nitrogen Fertilizer Pump (F14264A1)	JM0059223

ISO Liquid Control System

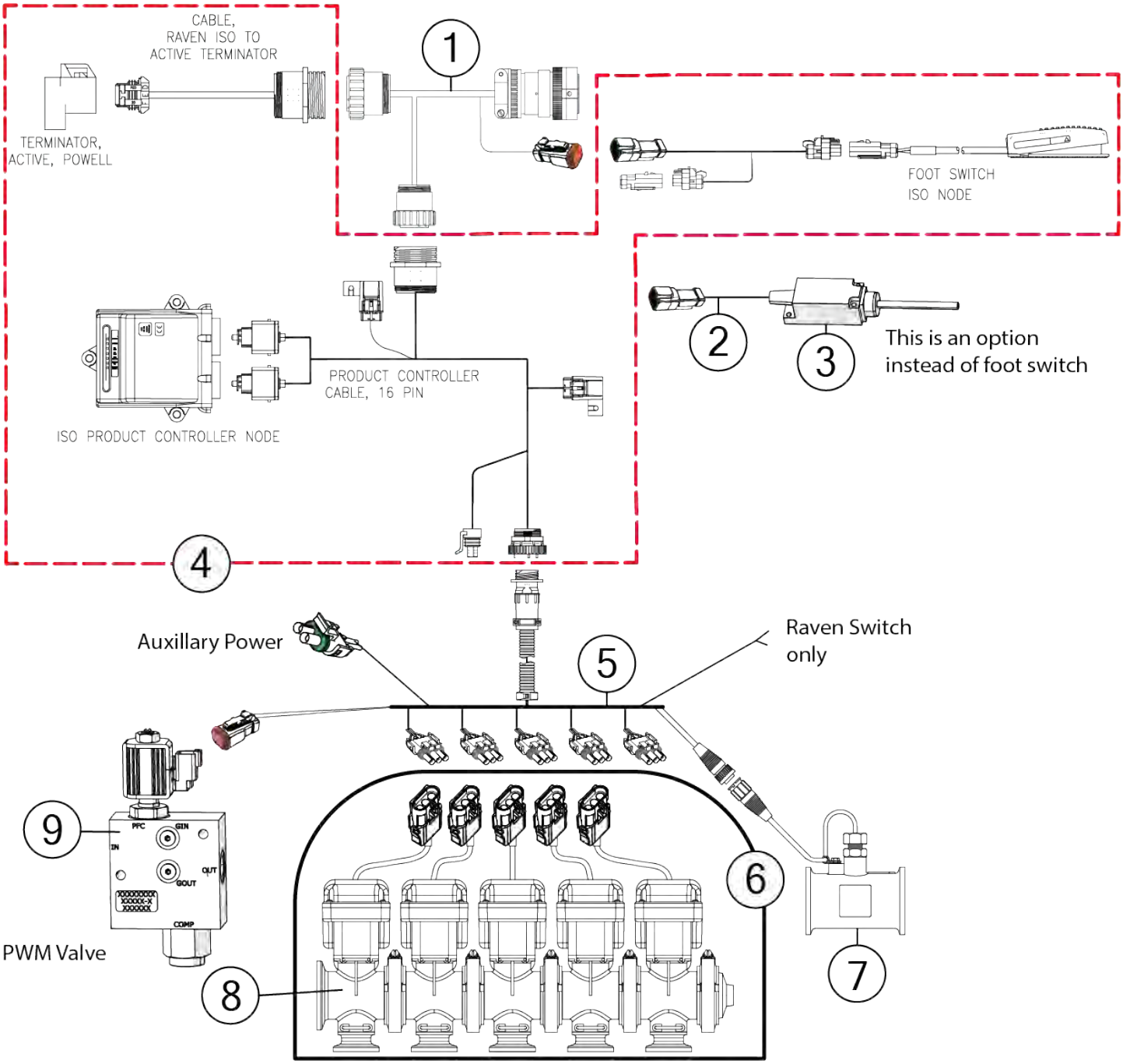

	Description	Part No.
1	Raven Cable ISOBUS Hitch to Raven ECU (17')	JM0051018
2	Remote Switch Cable for Implement Engagement - ISO Control	JM0050677
3	Mini Wisker Limit Switch (12T962)	JM0050161
4	Raven ISO Single Product Kit	JM0039339
5	NitroGro Break Out Harness 4' (5 Boom, Limit Switch, PWM, Flow Meter, Power)	JM0055255
6	Raven 5 Section Manifold	JM0038797
7	Raven Flow Meter RFM100P M220 Manifold Flange (6000 Series)	JM0038727
8	Raven Boom Valve	JM0032478
9	Hydraulic PWM Control Valve for Nitrogen Fertilizer Pump (F14264A1)	JM0059223

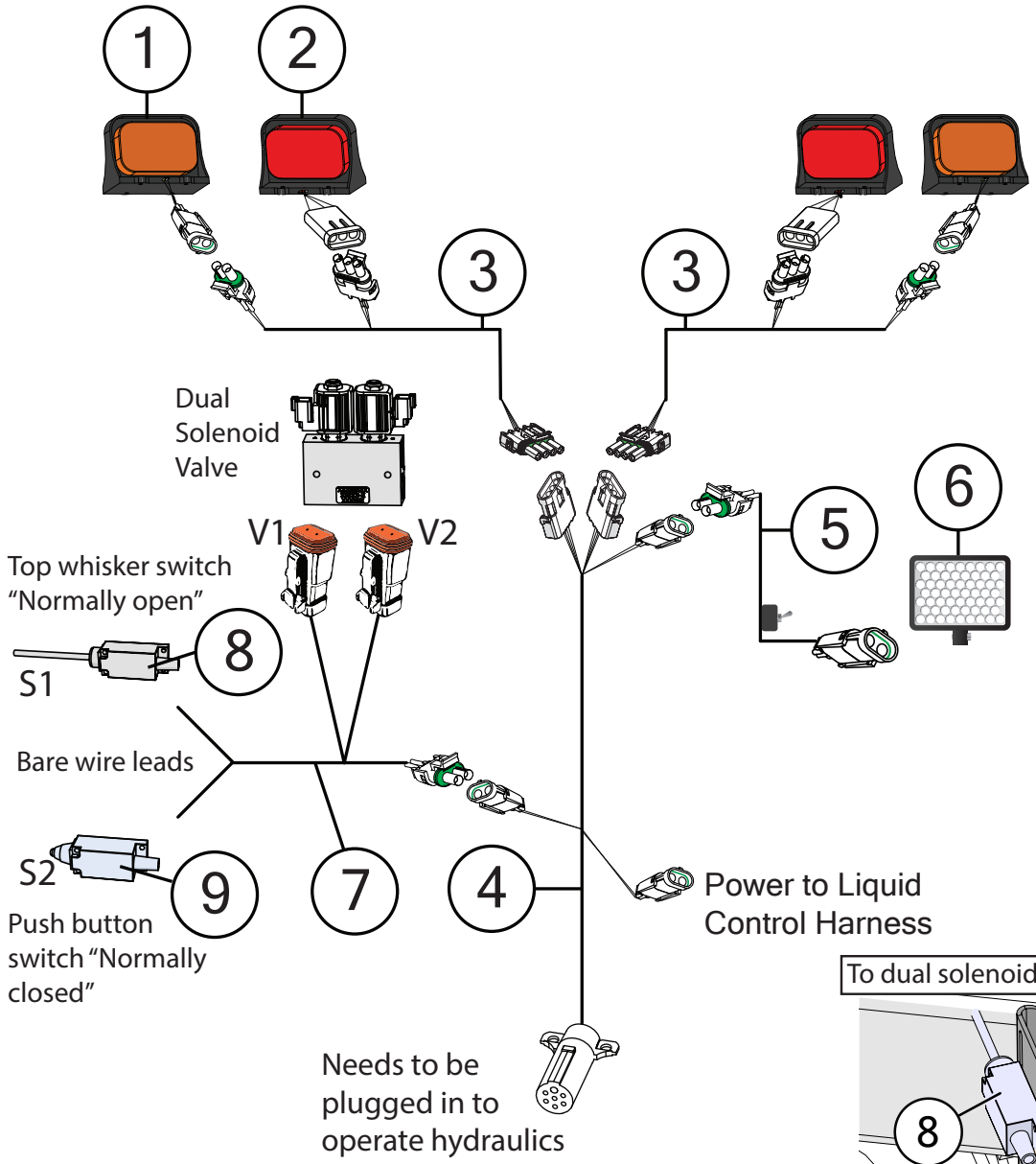

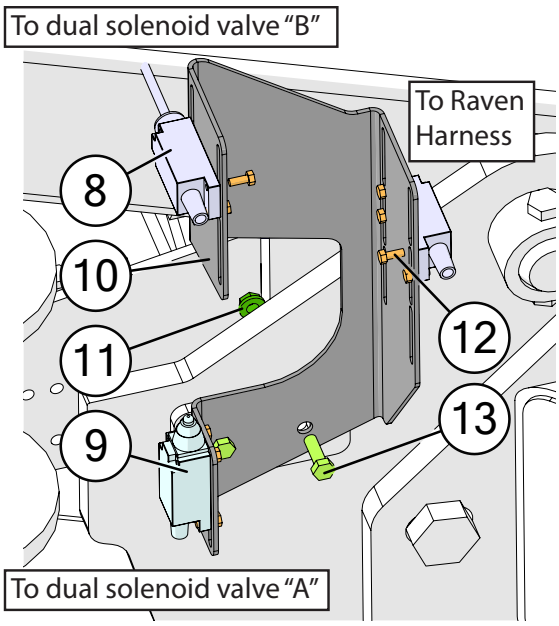

	Description	Part No.
1	Amber Light (Soil Conditioner, NitroGro)	JM0009975
2	Red Light (Soil Conditioner, NitroGro)	JM0009976
3	NitroGro 6000-Series Rear Harness	JM0055138
4	NitroGro 6000-Series Front Harness	JM0055137
5	NitroGro 6000 - Rear Flood Light Harness	JM0074220
6	LED Field Light with Weather Pack Connectors (SpeedTender, NitroGro)	JM0050942
7	Dual Solenoid Valve Switch Harness	JM0068895
8	Mini Wisker Limit Switch (12T962)	JM0050161
9	Limit Switch for Field Light (ME-8111)	JM0036040
10	6000 Series Applicator Limit Switch Bracket	JM0061978
11	5/16"-18 Gr5 Z SF Hex Nut	JM0014049
12	M5-0.8 x 12 Gr8.8 Z Hex Bolt	JM0036046
13	5/16"-18 x 1" Gr5 Z Hex Bolt	JM0001743