OPERATOR'S MANUAL

PATENTED SINGLE AUGER

GRAIN CARTS

1050-18S Grain Cart

J. & M. Mfg. Co., Inc.

P.O. Box 547 Ft. Recovery, OH 45846

Ph: (419) 375-2376 Fax: (419) 375-2708

www.jm-inc.com

JMMAN0101 (Rev. 03/14/06)

TO THE DEALER:

Read manual instructions and safety rules. Make sure all items on the Dealer's Pre-Delivery and Delivery Check Lists in the Operator's Manual are completed before releasing equipment to the owner.

The dealer must complete the Warranty Registration Card attached to the front inside cover of this manual and return to J. & M. Mfg. Co., Inc. at the address indicated on the card. **Warranty claims will be denied if the Warranty Registration Card has not been completed and returned.**

EXPRESS WARRANTY:

J. & M. Mfg. Co. Inc. warrants against defects in construction or materials for a period of ONE year. We reserve the right to inspect and decide whether material or construction was faulty or whether abuse or accident voids our guarantee.

Warranty service must be performed by a dealer or service center authorized by J. & M. Mfg. Co. Inc. to sell and/or service the type of product involved, which will use only new or remanufactured parts or components furnished by J. & M. Mfg. Co. Inc. Warranty service will be performed without charge to the purchaser for parts or labor based on the Warranty Labor Times schedule. Under no circumstance will allowable labor times extend beyond the maximum hours indicated in the Warranty Labor Times schedule for each warranty procedure. The purchaser will be responsible, however, for any service call and/or transportation of the product to and from the dealer or service center's place of business, for any premium charged for overtime labor requested by the purchaser, and for any service and/or maintenance not directly related to any defect covered under the warranty. Costs associated with equipment rental, product down time, or product disposal are not warrantable and will not be accepted under any circumstance.

Each warranty term begins on the date of product delivery to the purchaser. Under no circumstance will warranty be approved unless (i) the product warranty registration card (attached to the inside of the Operator's Manual) has been properly completed and submitted to the equipment manufacturer, and (ii) a warranty authorization number has been issued by the equipment manufacturer. This Warranty is effective only if the warranty registration card is returned within 30 days of purchase.

This warranty does not cover a component which fails, malfunctions or is damaged as a result of (i) improper modification or repair, (ii) accident, abuse or improper use, (iii) improper or insufficient maintenance, or (iv) normal wear or tear. This warranty does not cover products that are previously owned and extends solely to the original purchaser of the product. Should the original purchaser sell or otherwise transfer this product to a third party, this Warranty does not transfer to the third party purchaser in any way. J. & M. Mfg. Co. Inc. makes no warranty, express or implied, with respect to tires or other parts or accessories not manufactured by J. & M. Mfg. Co. Inc. Warranties for these items, if any, are provided separately by their respective manufacturers.

THIS WARRANTY IS EXPRESSLY IN LIEU OF ALL OTHER WARRANTIES OR CONDITIONS, EXPRESS, IMPLIED OR STATUTORY, INCLUDING ANY IMPLIED WARRANTY OF MERCHANTABILITY OR FITNESS FOR PARTICULAR PURPOSE.

In no event shall J. & M. Mfg. Co. Inc. be liable for special, direct, incidental or consequential damages of any kind. The exclusive remedy under this Warranty shall be repair or replacement of the defective component at J. & M. Mfg. Co. Inc's. option. This is the entire agreement between J. & M. Mfg. Co. Inc. and the Owner about warranty and no J. & M. Mfg. Co. Inc. employee or dealer is authorized to make any additional warranty on behalf of J. & M. Mfg. Co. Inc.

The manufacturer reserves the right to make product design and material changes at any time without notice. They shall not incur any obligation or liability to incorporate such changes and improvements in products previously sold to any customer, nor shall they be obligated or liable for the replacement of previously sold products with products or parts incorporating such changes.

SERVICE:

The equipment you have purchased has been carefully manufactured to provide dependable and satisfactory use. Like all mechanical products, it will require cleaning and upkeep. Lubricate the unit as specified. Observe all safety information in this manual and safety signs on the equipment.

For service, your authorized J. & M. dealer has trained mechanics, genuine J. & M. service parts, and the necessary tools and equipment to handle all your needs.

Use only genuine J. & M. service parts. Substitute parts may void the warranty and may not meet standards required for safe and satisfactory operation. Record the model number and serial number of your equipment in the spaces provided:

Serial No.: _____ **Date of Purchase:** _____

Purchased From: _____

Provide this information to your dealer to obtain correct repair parts.

1050-18S GRAIN CART
SPECIFICATIONS

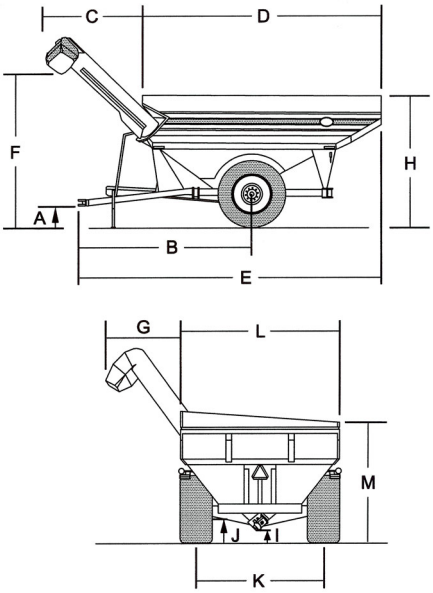

DIMENSIONS	
A)	1'-9"
B)	18'-10"
C)	8'-6"
D)	22'-0"
E)	29'-7"
F)	13'-6"
G)	6'-4"
H)	12'-0"
I)	1'-2"
J)	2'-3"
K)	9'-6"/10'-0"
L)	11'-9"
M)	10'-11"

SPECIFICATIONS	
Capacity	1050 bushels
Auger, one vertical	18" diameter
Wheels	31x32 or 32x36
Hubs	10 bolt
Spindles	6" diameter
Weight (approx.)	13,100#
PTO	1,000 rpm
Tire Size	35.5x32, 20 ply or 73x44:00, 16 ply
Tongue Weight:	
Empty	2,900 lbs
Loaded	4,200 lbs
Construction:	
Hopper	12 GA Steel
Undercarriage	8" x 4" x 1/2" Tubing
Axle	7" x 7" x 1/2" Tubing
Unloading Time**	2.4 minutes (approx.)

Note: Specifications are subject to change without notice or obligation
* Bushel capacities measured with #2 corn at 15% moisture (56 lb test wt.)
**Time varies with rpm and moisture content of grain

GENERAL INFORMATION

TO THE OWNER:

The purpose of this manual is to assist you in operating and maintaining your grain cart in a safe manner. Read it carefully. It furnishes information and instructions that will help you achieve years of dependable performance and help maintain safe operating conditions. If this machine is used by an employee or is loaned or rented, make certain that the operator(s), prior to operating:

1. Is instructed in safe and proper use.
2. Reviews and understands the manual(s) pertaining to this machine.

Throughout this manual, the term **IMPORTANT** is used to indicate that failure to observe can cause damage to equipment. The terms **CAUTION**, **WARNING** and **DANGER** are used in conjunction with the Safety-Alert Symbol, (a triangle with an exclamation mark), to indicate the degree of hazard for items of personal safety. When you see this symbol, carefully read the message that follows and be alert to the possibility of personal injury or death.

⚠	This Safety-Alert symbol indicates a hazard and means ATTENTION! BECOME ALERT! YOUR SAFETY IS INVOLVED!
⚠ **DANGER**	Indicates an imminently hazardous situation that, if not avoided, will result in death or serious injury.
⚠ **WARNING**	Indicates a potentially hazardous situation that, if not avoided, could result in death or serious injury, and includes hazards that are exposed when guards are removed.
⚠ **CAUTION**	Indicates a potentially hazardous situation that, if not avoided, may result in minor or moderate injury.
IMPORTANT	Indicates that failure to observe can cause damage to equipment.
NOTE	Indicates helpful information.

GENERAL INFORMATION

BOLT TORQUE CHART

Always tighten hardware to these values unless a different torque or tightening procedure is listed for a specific application.

Fasteners must always be replaced with the same grade as specified in the manual parts list.

Always use the proper tool for tightening hardware: SAE for SAE hardware and Metric for metric hardware.

Make sure fastener threads are clean and you start thread engagement properly.

All torque values are given to specifications used on hardware defined by SAE J1701 & J1701M JUL 96.

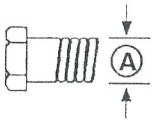

SAE SERIES TORQUE CHART

SAE Grade 2
(No Dashes)

SAE Bolt Head Identification

SAE Grade 5
(3 Radial Dashes)

SAE Grade 8
(6 Radial Dashes)

(A) Diameter (Inches)	Wrench Size	MARKING ON HEAD					
		SAE 2		SAE 5		SAE 8	
		Lbs.-Ft.	N-m	Lbs.-Ft.	N-m	Lbs.-Ft.	N-m
1/4	7/16"	6	8	10	13	14	18
5/16	1/2"	12	17	19	26	27	37
3/8	9/16"	23	31	35	47	49	67
7/16	5/8"	36	48	55	75	78	106
1/2	3/4"	55	75	85	115	120	163
9/16	13/16"	78	106	121	164	171	232
5/8	15/16"	110	149	170	230	240	325
3/4	1-1/8"	192	261	297	403	420	569
7/8	1-5/16"	306	416	474	642	669	907
1	1-1/2"	467	634	722	979	1020	1383

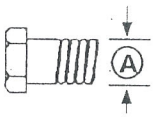

METRIC SERIES TORQUE CHART

Metric
Grade 8.8

Metric Bolt Head Identification

Metric
Grade 10.9

Diameter & Thread Pitch (Millimeters) (A)	Wrench Size	COARSE THREAD				FINE THREAD				Diameter & Thread Pitch (Millimeters) (A)
		MARKING ON HEAD				MARKING ON HEAD				
		Metric 8.8		Metric 10.9		Metric 8.8		Metric 10.9		
		N-m	Lbs.-Ft.	N-m	Lbs.-Ft.	N-m	Lbs.-Ft.	N-m	Lbs.-Ft.	
6 x 1.0	10 mm	8	6	11	8	8	6	11	8	6 x 1.0
8 x 1.25	13 mm	20	15	27	20	21	16	29	22	8 x 1.0
10 x 1.5	16 mm	39	29	54	40	41	30	57	42	10 x 1.25
12 x 1.75	18 mm	68	50	94	70	75	55	103	76	12 x 1.25
14 x 2.0	21 mm	109	80	151	111	118	87	163	120	14 x 1.5
16 x 2.0	24 mm	169	125	234	173	181	133	250	184	16 x 1.5
18 x 2.5	27 mm	234	172	323	239	263	194	363	268	18 x 1.5
20 x 2.5	30 mm	330	244	457	337	367	270	507	374	20 x 1.5
22 x 2.5	34 mm	451	332	623	460	495	365	684	505	22 x 1.5
24 x 3.0	36 mm	571	421	790	583	623	459	861	635	24 x 2.0
30 x 3.0	46 mm	1175	867	1626	1199	1258	928	1740	1283	30 x 2.0

TABLE OF CONTENTS

INTRODUCTION ____ 2

EXPRESS WARRANTY ____ 2

SPECIFICATIONS ____ 3

GENERAL INFORMATION ____ 3

BOLT TORQUE CHART ____ 4

SAFETY RULES ____ 6

SAFETY SIGNS ____ 7

INITIAL OPERATION ____ 8

OPERATION ____ 9-11

ROUTINE MAINTENANCE ____ 11

TROUBLE SHOOTING ____ 12

SERVICE ____ 13-14

STORAGE ____ 14

REMOVING FROM STORAGE ____ 14

PARTS LISTS/DIAGRAMS ____ 15-20

WEIGH SCALE INSTALLATION INSTRUCTIONS ____ 21-23

ROLL TARP INSTALLATION ____ 24-27

SERVICE RECORDS ____ 28

SAFETY RULES

ATTENTION! BECOME ALERT! YOUR SAFETY IS INVOLVED!

Safety is a primary concern in the design and manufacture of our products. Unfortunately, our efforts to provide safe equipment can be erased by an operator's single careless act. In addition, hazard control and accident prevention are dependent upon the awareness, concern, judgement, and proper training of personnel involved in the operation, transport, maintenance and storage of equipment.

Make certain that the operator(s), prior to operating is instructed in safe and proper use and reviews and understands the manual(s) pertaining to this machine. Also make certain that the operator(s) reviews and understands the operator's manual of the tractor prior to hooking up or operating the grain cart.

Read this manual before you operate this machine. If you do not understand any part of this manual, or need more information, contact the manufacturer or your authorized dealer.

SAFETY

Understand that your safety and the safety of other persons is measured by how you service, and operate this machine. Know the positions and functions of all controls before you try to operate them. Make sure to check all controls in a safe area before starting your work.

The safety information given in this manual does not replace safety codes, federal, state or local laws. Make certain your machine has the proper equipment as designated by local laws and regulations.

A frequent cause of personal injury or death is from persons falling off equipment and being run over. Do not permit persons to ride on this machine.

Travel speeds should be such that complete control and machine stability is maintained at all times. Where possible, avoid operating near ditches, embankments and holes. Reduce speed when turning, crossing slopes and rough, slick or muddy surfaces.

Collision of high speed road traffic and slow moving machines can cause personal injury or death. On roads, use flasher lights according to local laws. Keep slow-moving-vehicle emblem visible. Pull over to let faster traffic pass.

Hydraulic oil leaking under pressure can penetrate skin and cause infection or other injury.
To Prevent Personal Injury:

Relieve all pressure, before disconnecting fluid lines.
Before applying pressure, make sure all connections are tight and components are in good condition.
Never use your hand to check for suspected leaks under pressure. Use a piece of cardboard or wood for this purpose.
If injured by leaking fluid, see you doctor immediately.

When transporting the grain cart, always keep the auger in stow position.
Use care when moving or operating grain cart near electric lines as serious injury or death can result from contact.
Never adjust, service, clean, or lubricate grain cart until all power is shut off. Keep all safety shields in place. Keep hands, feet, hair and clothing away from moving parts while unit is in operation.

The service ladder is for service work only. If you must climb into grain tank, be certain that all power is shut off and then use extreme caution when climbing into grain cart.

Make sure that everyone is clear of equipment before applying power or moving the machine.

Make sure that the grain cart is fastened securely to the tractor by using a high strength hitch pin, clip and safety chains. Make sure that the grain cart hitch properly matches the hitch type of the tractor. Use a single prong (spade) grain cart hitch with a double prong (clevis) tractor hitch. Use a double prong (clevis) grain cart hitch with a single prong (spade) tractor hitch.

Before filling the grain cart, make certain that no one is inside the grain tank. Never allow children or anyone in, near, or on the grain cart during transport or during loading and unloading of grain. Be aware that moving grain is dangerous and can cause entrapment, resulting in severe injury or death by suffocation.

Never operate the auger system with anyone inside of the grain tank. Hands, feet, hair, and clothing can fit through the openings in and around the grate. Contact with the auger can cause severe injury or death. Make certain that all power is shut off before service work is performed.

Before unhooking the grain cart from the tractor, be sure to properly block the wheels to prevent the cart from moving.

SAFETY SIGNS

ATTENTION! BECOME ALERT! YOUR SAFETY IS INVOLVED!

Replace Immediately If Damaged or Missing!

IMPORTANT: Install new safety signs if the old signs are destroyed, lost, painted over or cannot be read. When parts are replaced that have safety signs, make sure you install a new sign with each new part. New signs are available from the manufacturer or your authorized dealer.

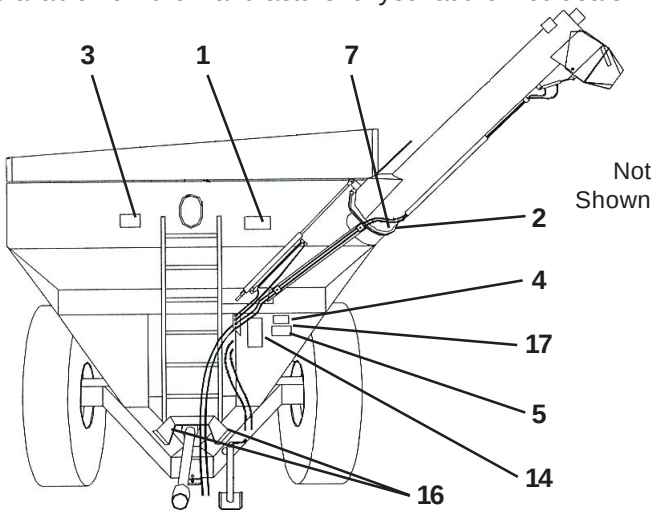

Ref. #	Description	Part #	Req'd
1	Sign, Danger	CDD-101	1
2	Sign, Danger	CDD-103	3
3	Sign, Danger	CDD-102	1
4	Sign, Danger	CDD-104	3
5	Sign, Warning	CDW-107	1
6	Sign, Important	CDI-112	1
7	Sign, Warning	CDW-109	1
8	Sign, Farm Use	CDI-113	1
9	Sign, Open	CDI-114	1
10	Sign, Closed	CDI-115	1
11	Sign, J&M (small)	CDD-116	2
12	Sign, J&M (large)	CDD-111	4
13	Sign, Vinyl	CDD-117	1
14	Sign, Danger	CDD-105	1
15	Sign, Warning	CDW-110	2
16	Sign, Danger	CDD-106	5
17	Sign, Warning	CDW-108	1

Not Shown

CDD-101

CDD-102

CDD-103

CDD-104

CDD-105

CDD-106

CDW-108

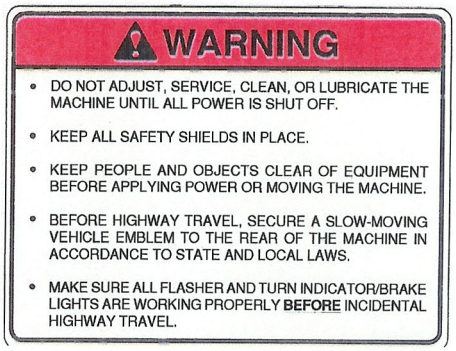

CDW-107

CDW-109

CDW-110

INITIAL OPERATION/MAINTENANCE

⚠ WARNING

BE CERTAIN THAT ALL POWER IS SHUT OFF BEFORE SERVICING THE GRAIN CART.

Before the grain cart is put into service:

Have the safety instructions been read and clearly understood by the operator(s) of this machine?

Has the gearbox been properly filled with EP-80-90 gearbox lubricant?

Have all nuts, bolts, bearings, and braces been properly fastened?

IMPORTANT: Has the slip clutch on the PTO been serviced? If the slip clutch is left unchecked, damage to the power-take-off and drive shaft may result. Before using the grain cart, loosen the bolts around the slip clutch. Make sure that the friction plates turn free of each other and are not corroded together. Retighten the tension bolts. Run the auger system EMPTY and check for proper engagement of the slip clutch.

Check the PTO overlap length. Overlap length may vary depending on tractor model. Try to obtain the greatest possible overlap without bottoming out in the maximum operating condition. **Too much overlap may cause PTO to bottom out and damage driveline.** See OPERATING INSTRUCTIONS for recommended overlap.

Are all bearings on the drive line properly greased? Are all set screws in the bearings and U-Joints tight? Has the power-take off been properly greased at all points including cross bearings? Has the universal joint at the gearbox been greased?

Has the hanger bushing assembly at the auger hinge been greased and have all grease points at the hinge area been greased?

TIRE PRESSURE - Are the tires properly inflated? The following is to be used as a **general guide** for tire inflation for cyclic use. Figures can vary depending on specific brand of tire used. **It is important that tires are inspected before and after unit is loaded.** Start with the minimum pressure indicated. The tire should stand up with no side wall buckling or distress as tire rolls. **Do Not Exceed Maximum Recommended Tire Pressure.**

Tire Size	Pressure
23.1 x 26	38 psi
24.5 x 32	38 psi
30.5 x 32	33 psi
35.5 x 32	32-42 psi
900/60-32	35-45 psi
18.4 x 38	37 psi
20.8 x 38	35-40 psi
20.8 x 42	37 psi

VERY IMPORTANT:
Under no circumstances is it recommended to tow a loaded grain cart in excess of 8 m.p.h.

WHEEL NUTS - Are the wheel nuts properly fastened (torque to 490 Lbs.-Ft. for standard 22 MM wheel studs and nuts)? **They should be checked after each load during initial operation of the cart and then after every 10 hours of use. Failure to do so may damage wheel nut seats.** Once seats are damaged, it will become impossible to keep nuts tight.

The drawing shows the proper ways of mounting the wheels using Budd-type nuts. The wheels supplied with your Grain Cart have straight holes and the Budd nuts will be mounted according to Figure 1. Wheels that are improperly installed on the grain cart, resulting in product failure, will nullify warranty and shift the burden of liability to the owner/operator of the equipment. We suggest that you inspect your wheel nuts to make sure that they are properly installed. Also, check the wheel nuts on a regular basis to ensure they are tight.

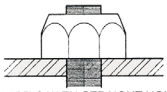

WHEELS WITH STRAIGHT HOLES
FIGURE 1

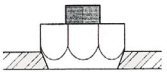

WHEELS WITH CHAMFERED HOLES
FIGURE 2

LIGHTING AND SAFETY DECALS - Are the rear, amber extremity lights properly positioned? Extend lights within 16” of the left and right extremities of the grain cart. Is a SMV Emblem attached to the grain cart?

Are the lights working properly? Are all reflective decals clean and visible? Are they positioned correctly?

OPERATING INSTRUCTIONS

WARNING

BE CERTAIN THAT ALL POWER IS SHUT OFF WHEN HOOKING UP TO TRACTOR OR CONNECTING HYDRAULIC LINES TO TRACTOR.

Preparing the Grain Cart for Use (see tractor recommendation for grain cart model below):

Model 1075-18R, 1075-22R, 1050-18 or 1050-22 Grain Cart requires a 4WD tractor.

IMPORTANT: Do NOT pull loaded grain cart on highway. For incidental highway travel, observe the section below.

Tow Loads Safely

Stopping distance increases with speed and weight of towed loads, and on slopes. Towed loads with or without brakes that are too heavy for the tractor or are towed too fast can cause loss of control. Consider the total weight of the equipment and its load.

Observe these recommended maximum road speeds, or local speed limits which may be lower:

- **Road Travel (grain cart empty)** - Do not travel more than 32 km/h (20 mph) and do not tow loads more than 1.5 times the tractor weight.

Ensure the load does not exceed the recommended weight ratio. **Use additional caution when towing loads under adverse surface conditions, when turning, and on inclines.**

WARNING: For greater stability in uneven or steep terrain, position wheels at the furthest out axle setting.

IMPORTANT:

1) Hookup grain cart to tractor using a good quality hitch pin. Attach a safety chain (not included as standard equipment) to the tractor and around the A-frame of the cart as shown. Make sure the grain cart hitch properly matches the hitch of the tractor. Use a single prong (spade) grain cart hitch with a tractor double prong (clevis) hitch. Use a double prong (clevis) grain cart hitch with a single prong (spade) tractor hitch.

SAFETY CHAIN USER INSTRUCTIONS

a) Secure the safety chain by looping it around the grain cart attaching frame on the left side (or both sides if required) and connect to the towing machine's attaching bar.

b) Do Not allow no more slack than necessary for articulation (max 11 in.).

c) Do Not use any intermediate support as the attaching point.

d) Store the safety chain by securing it around the main axle A-frame of the grain cart.

e) Replace the safety chain if one or more links or end fittings are broken, stretched or otherwise damaged or deformed.

2) Attach power-take-off shaft to tractor. PTO must have at least 12" of engagement. Check tractor drawbar for clearance and length and adjust if needed. **Make sure that the PTO does not bottom out when making sharp turns as it may bend the drive shaft.**

3) Make sure the jack stand is removed from the lower support position before the cart is moved. Never use the jack to support a loaded grain cart.

4) Be sure that no debris or foreign objects are in the grain cart.

5) Attach hydraulic lines to the tractor. Two hydraulic lines operate the gate mechanism. Connect these lines to one service outlet on the tractor. The remaining two lines operate the folding mechanism of the auger. Connect these lines to a second service outlet on the tractor. Make sure the air is bled from the hydraulic cylinders and lines.

6) Run auger system EMPTY before actual use. Make certain that slip clutch is operating and that upper and lower augers are properly engaged.

7) Connect lighting hook-up to tractor electric outlet. Make sure that all flasher and turn indicator lights are working properly before incidental highway travel.

LOADING AND UNLOADING THE GRAIN CART

1) With the gate indicator in the closed position, fill the tank with grain.

2) With the PTO disengaged, fold discharge auger to upright position.

3) **IMPORTANT:** After the auger is in the upright position, be sure to start the PTO at a SLOW RATE OF SPEED until the lugs on the upper auger engage the drive dog on the bottom auger (failure to follow this procedure may cause extensive damage to both the drive dog and drive line.)

4) Increase PTO speed and open the inner gate until the pointer is in the half-way position. When grain begins flowing from the discharge auger, open gate to the full position.

5) Once the grain has ceased to flow, return the gate to the closed position (for complete cleanout, gradually close gate, allowing the opening to be reduced). Disengage the PTO and allow its rotation to come to a complete stop. Auger is now ready to be returned to the stow position. (Important - Do Not Pull the grain cart through the field with the unloading auger in the upright position. Failure to return the auger to the lowered position may damage hinge and greatly reduce the life of the auger system.)

⚠ CAUTION

TO THE OPERATOR(S)

Do NOT operate grain cart before reading and understanding the Operator's Manual and ALL danger, warning and caution signs.

Be sure that a slow-moving-vehicle emblem is attached to the rear of the grain cart.

Never exceed 1,000 rpm on the system.

Never fold or extend the auger until the PTO has come to a complete stop.

Never fill the grain cart unless the gate indicator is in the closed position.

Never allow foreign objects (shovels, etc.) to be placed inside the grain cart.

Never engage lugs and drive dogs when system is moving at a high rate of speed.

Never do maintenance work or service the cart with the tractor running.

LUBRICATION SERVICE SCHEDULE

IMPORTANT: Your Grain Cart has grease fittings at all critical points. These should be serviced before the cart is put into operation.

⚠ WARNING

BE CERTAIN THAT ALL POWER IS SHUT OFF BEFORE SERVICING THE GRAIN CART.

Hitch: There is a grease fitting located on the pivot shaft of the swivel hitch.

PTO & Drive Line: The grease fittings on the PTO should be serviced after every 8 hours of use. Service the grease fittings on each of the drive bearings and also the univeral joint after every 8 hours of use.

Folding Mechanism of Auger: One grease fitting is located on the pivot pin of the folding auger. This fitting should be serviced after every 8 hours of use. Service the grease fitting on the hanger bushing assembly (top end of the lower auger assembly) after every 8 hours of use or as needed.

Spring Loaded Top Auger Bearing: Service the grease fitting on the upper auger bearing (located on the top end of the upper auger assembly) after every 8 hours of use. Lubricate springs and retaining bolts on the bearing before prolonged storage of the grain cart.

Gearbox: Gearbox lubricant has been added to the gearbox during final assembly. Recheck lubricant level before initial operation of this cart. The fluid level should be checked from time to time. An inspection plug is located in the center of the top of the gearbox mount plate. To check the fluid level, remove drain plug at the bottom of the gearbox and also the vented inspection plug. Drain lubricant. Return drain plug and refill gearbox with 24 ounces of gearbox lubricant. (Gearbox is properly filled when half full of lubricant). DO NOT OVERFILL. Use EP 80-90 gearbox lubricant or equivalent.

ROUTINE MAINTENANCE

⚠ WARNING

WHEN SERVICING THE GRAIN CART, BE CERTAIN THAT ALL POWER IS SHUT OFF.

Repack the wheel bearings at least once a year. Use Bearing Gard MK1 or equivalent lubricant. Also check the seal for wear and replace if necessary.

Check the grain cart periodically for cracks in welds and for other structural damage. Have cracked welds fixed immediately. Failure to do so could result in extensive damage to the grain cart and greatly reduce the life of the cart.

Lubricate the slides on the clean-out door.

Check hydraulic hoses for wear and replace if needed.

Make sure that the tires are properly inflated. See INITIAL OPERATION / MAINTENANCE for recommended instructions for tire pressure. It is important that tires are inspected before and after unit is loaded.

Check PTO for wear of plates in slip clutch. Replace if needed.

Make sure that all guards and shields are in place before operating the grain cart.

Make sure wheel nuts are tight before operating the grain cart. Wheel nuts should be checked during initial operation of the cart and after every 10 hours of use.

Make sure set screws are tight in bearings along drive line and in U-Joints.

TROUBLE SHOOTING

⚠ WARNING

MAKE SURE THAT ALL POWER IS SHUT OFF BEFORE SERVICING THE GRAIN CART. MAINTENANCE AND REPAIR SERVICE WORK TO BE PERFORMED BY QUALIFIED SERVICEMEN ONLY.

Trouble...	Possible Cause ...	Possible Remedy ...
Auger will not return to down position or move from stow position	Dirt in restricter	Remove restricter fittings from outside hydraulic cylinder and clean out dirt
	Faulty Check Valve	Repair or Replace Valve
	Upper flighting and lower flighting locked together	Bearing on top of upper flighting needs adjusting. When auger is in engaged position, there must be a 1/8" gap between bottom of top bearing and top of upper tube assembly (SEE ADJUSTING THE UPPER FLIGHTING)
Slip Clutch not working properly	Pressure plates (lining) corroded together	Loosen bolts around slip clutch, remove dirt and corrosion, and retighten bolts to proper tension
Hanger Bushing Assembly at top of lower flighting is hot	Top of hanger bushing assembly is rubbing against the drive dog	Adjust position of hanger bushing assembly
		Remove lower flighting assembly and place a shim between spline and gearbox
Excessive Vibration	Auger flighting or shaft is bent	Straighten or replace auger flighting
	Drive shaft is bent	Replace or straighten drive shaft
Grain flow stoppage	Bolt sheared in drive dog	Replace bolt in drive dog. Engage upper and lower flighting at a slow rate of speed. (Drive dog and lugs are being engaged at too fast a rate of speed)
	Bolt sheared in drive dog	Upper and lower flighting are disengaged before auger comes to a complete stop. Replace bolt in drive dog. Never engage or disengage upper and lower flighting until auger comes to a complete stop
	Slip clutch not working properly	Inspect clutch linings and replace if worn
	PTO key sheared	Replace key and tighten set screw
Auger tube breaking away from grain cart at hinge or ram in hydraulic cylinder is bent	Auger is extended in upright position while traveling in field	Lower auger to stow position after unloading

ADJUSTING THE SLIP CLUTCH

After the first hour of operation, the slip-disc clutch should be checked for overheating. After this first check, the slip-disc clutch should be checked weekly or anytime there is excessive slippage of the friction discs. The slip-disc clutch should be checked for moisture, which could cause corrosion on the drive plates. If the grain cart has been idle for an extended period of time, or in wet weather, check to make sure that the friction lining plates are not rusted or corroded together. The friction lining plates are 1/8" thick new. They should be replaced after 1/32" of wear to ensure proper operation.

IMPORTANT: If the machine has never been used or has not been operated for (1) season, the following is recommended.

When the grain cart has been idle for an extended period of time, it is important to check the slip-disc clutch to make sure that it will slip when an obstacle or load heavier than the torque setting is encountered. Use the following procedure to make certain that the slip-disc clutch will slip and give the overload protection required.

1) Loosen nut on springs until the springs can rotate freely, yet remain secure on the bolts.
2) Place a mark on the outer plates of the slip-disc clutch.
3) Securely attach the PTO and the grain cart to the tractor and start the tractor.
4) Engage the PTO for several seconds then quickly disengage it.
5) Turn the tractor off.
6) The friction lining plates should have been broken loose or "slipped". Check the marks placed on the outer plates of the slip-disc clutch.
7) Adjust the nuts on the springs to set the spring compression height to 1.27"

ADJUSTING THE LOWER FLIGHTING AND HANGER BUSHING ASSEMBLY

⚠ WARNING

MAKE SURE THAT ALL POWER IS SHUT OFF BEFORE ADJUSTING THE FLIGHTING ASSEMBLY.

If the drive-dog and hanger assembly are becoming excessively hot during unloading, the lower flighting and/or hanger may need adjusting. The hanger bushing assembly has elongated holes where it attaches to the outer tube assembly. Loosen the two 3/8" bolts on the hanger bushing assembly. Adjust the hanger either up or down and locate in center between flighting center and drive-dog. Retighten the bolts. (Make certain that the flighting center and drive-dog does not rub the hanger bushing assembly causing them to become hot.)

If the hanger can no longer be adjusted by moving it up or down on the elongated holes, both the hanger bushing assembly and the lower flighting will have to be removed. After removing them from the tube assembly, place a shim (between 1/8" - 3/16" thick) where the gearbox and the spline coupler (welded to lower flighting) meet. Replace the lower flighting and reattach the hanger to the tube assembly. Readjust the hanger assembly. (NOTE: The bottom of the lower flighting is not attached to the gearbox with any bolts or set screws but may be "froze" fast. Be careful when removing the lower flighting from the gearbox.) For easier removal of the lower flighting, keep the gearbox at the bottom intact, remove the 2 3/8" bolts from the hanger bushing assembly and pull the lower flighting off of the gearbox.

After adjusting the lower flighting, move the upper auger to the unload position and check the upper flighting for readjustment.

ADJUSTING THE UPPER FLIGHTING

⚠ WARNING

MAKE SURE THAT ALL POWER IS SHUT OFF BEFORE ADJUSTING THE FLIGHTING ASSEMBLY.

If the upper and lower flightings do not properly separate during the unfolding sequence, the upper flighting may need adjusting. Before making adjustment to upper flighting, check to see if the lugs and drive-dog are locking together by checking for a 1/8" space between the base of the 4-hole flange bearing and the upper tube housing. (If not, dirt in the restricter or a faulty check valve on the hydraulic cylinder used to raise the upper tube may be the cause of the problem. *See instruction for removing dirt from the restricter).

Fold the upper tube assembly into the upright position. Position upper flighting in engaged position with lower flighting. Locate 4-hole flange bearing on top of the upper tube housing. With the upper flighting in the engaged position, check the spacing between the upper bearing and the upper tube housing. There must be a 1/8" space between the base of the 4-hole flange bearing and the upper tube housing. If there is NOT a space between the bearing and the upper tube housing, or if there is more than a 1/8" space, the upper flighting will need adjusting. To adjust the upper flighting, loosen the 1 1/4" hex nuts both below and above the 4-hole flange bearing. Move the 1 1/4" hex nuts either up or down the threaded shaft on top of the upper flighting until a 1/8" gap is between the base of the bearing and the upper tube housing. Tighten the 1 1/4" hex nuts.

If the upper and lower flighting still does not separate properly during the folding sequence, a small bevel may need to be ground out of the inside of the lugs where they meet the drive-dog. Grind approximately 1/8" off of the corner of the lugs where they touch against the drive-dog.

REMOVING DIRT FROM RESTRICTERS ON HYDRAULIC CYLINDER

⚠ WARNING

MAKE SURE THAT ALL POWER IS SHUT OFF AND THE UPPER AUGER TUBE IS IN THE DOWN POSITION BEFORE REMOVING THE RESTRICTERS.

Remove restricters from 90 degree street elbow on hydraulic cylinder. Remove dirt from fitting to allow hydraulic oil to flow freely through the restricter. Reattach the restricter to the street elbow. Use teflon sealant tape or equivalent on the threads of the restricter before reattaching.

If restricter continues to plug with dirt, replace or filter the hydraulic oil in your system.

STORAGE PREPARATION

IMPORTANT: When the grain cart is not going to be used for a length of time, store the cart in a dry, protected place. Leaving your grain cart outside, open to the weather, will shorten its life.

Follow the procedure below when your grain cart is placed in storage for periods up to six months.

1) Cover electronic monitor (if equipped) with plastic before washing the grain cart. Wash or clean and completely lubricate the grain cart. (*See the lubrication service section in this manual.)
2) Remove all grain from inside the grain tank, auger tube assemblies, and at the clean-out door.
3) Check gearbox oil in the gearbox and replace with new EP 80-90 gearbox lubricant if necessary.
4) Touch-up spots where paint has been worn away (use a good quality primer paint - especially before applying graphite paint to the inside of the grain tank).
5) Retract all hydraulic cylinders to prevent the piston rods from rusting.
6) If the grain cart is equipped with an electronic weigh system, fully charge the battery to prevent freezing. Disconnect the negative (-) ground cable at the battery to prevent possible discharge.
7) Clean the tires before storage. Inflate the tires at regular intervals.
8) Open the clean-out door at the base of the grain tank.
9) Loosen the Slip Clutch Tension Bolts.

REMOVING FROM STORAGE

1) Check the oil in the gearbox.
2) Check the battery and make sure that it is fully charged (if equipped with an electronic weigh system). Reconnect the negative (-) cable.
3) Inflate the tires to the correct operating pressures.
4) Close the clean-out door at the base of the grain tank.
5) Make sure that all shields are in the proper position.
6) Tighten the Slip Clutch Bolts until spring length is 1.27".

REPAIR PARTS LIST AND DIAGRAMS

When performing maintenance work, wear sturdy, rough-soled work shoes and protective equipment for eyes, hair, hands, hearing and head. Follow Operator's Manual instructions to ensure safe and proper maintenance and repair.

Your local, authorized dealer can supply genuine replacement parts. Substitute parts may not meet original equipment specifications and may be dangerous.

WARNING

BE CERTAIN THAT ALL POWER IS SHUT OFF BEFORE PERFORMING ANY MAINTENANCE OR REPAIR WORK.

HUB AND SPINDLE ASSEMBLY

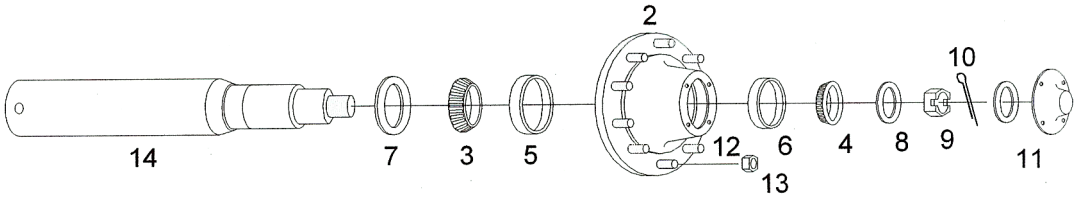

#	Part #	Description
1	31x32-10	Wheel Rim, 10 hole 31x32 (3 pc)
	OR-3132	Rubber O-Ring Seal
	31x32-1P-10	Wheel Rim, 10 hole 31x32 (1 pc)
	32x36-10	Wheel Rim, 10 hole 32x36
2	H25000	Hub w/Studs and Nuts
3	71455	Large Bearing
4	663	Small Bearing
5	71750	Large Race
6	653	Small Race
7	CR55179	Seal
8	EM-25M	Spindle Washer
9	SF-2512	Slotted Spindle Nut
10	3754	Cotter Pin
11	D-25000	Dust Cap w/Gasket
12	22MM-90	Wheel Stud, 22 MM x 90 MM
13	22MM-N	Wheel Nut, 22 MM
14	628	Spindle, 6" diameter x 28"
15	HSA-1075	Hub and Spindle Assembly
16	18HBLN	1" x 8" Hex Bolt w/Lock Nut

POWER TAKE-OFF SHAFT

#	Part #	Description
1	28428	Complete Collar Yoke C15
2	18130	Cross Journal Set
3	18133	Outer Yoke
4	00243	Roll Pin for Outer Tube
5	18210	Bush with Grease Nipple
6	30710	Complete Outer Tube
7	90010	Inner Tube
8	00271	Roll Pin for Inner Tube
9	18134	Inner Yoke
10	84033	Complete Slip Clutch
11	19121	Retain Collar for Outer Tube
12	19122	Retain Collar for Inner Tube
13	27820	Complete Guard
14	00452	Outer Circlip
15	16490	Sliding Sleeve Collar
16	15107	Spring
17	16489	Fixed Sleeve
18	00085	Ball 5/8"
19	18428	Yoke C15
20	14022	Spring
21	18016	Flanged Yoke
22	19019	Bush with Grease Nipple
23	19018	Lining Ring
24	00502	Bolt M12x1.25x65 & Nut
25	18453	Clutch Support F40
26	19014	Inner Plate
27	19115	Intermediate Plate

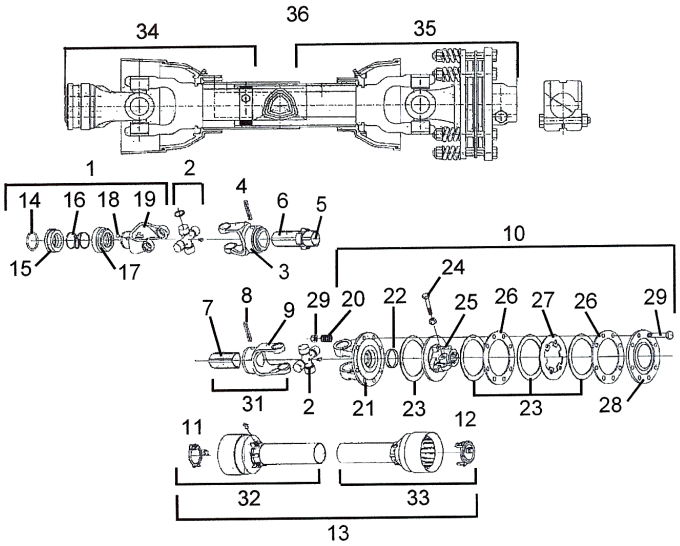

#	Part #	Description
28	19116	Pressure Plate
29	00548	Bolt & Nut M10x100
30	80039	Female Tube Yoke
31	80529	Male Tube Yoke w/Roll Pin
32	67820	Half Female Guarding
33	37820	Half Male Guarding
34	21110	Front Half PTO (1 3/4")
34	21110-138	Front Half PTO (1 3/8")
35	36510	Back Half of PTO w/Slip Clutch
36	CPTO-134	PTO Complete (Comer) (1 3/4")
36	CPTO-138	PTO Complete (Comer) (1 3/8")

130 DEGREE GEARBOX ASSEMBLY

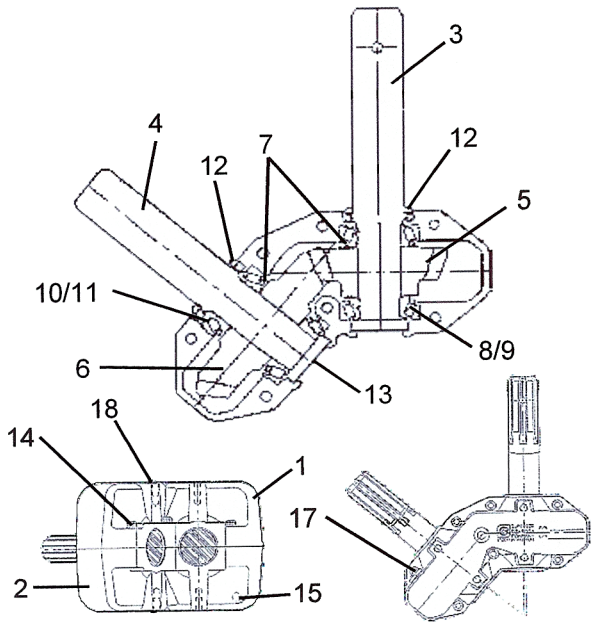

#	Part #	Description
1	A0150	Casting, Upper Half
2	A0149	Casting, Lower Half
3	A0142	1 3/4" Input Shaft
4	A0143	1 3/4" Output Shaft
4	H61S18	18 Tooth Gear
6	H61S29	29 Tooth Gear
7	H00101-01	Shim, Arbor
8	414276	Bearing, Cup
9	514137	Bearing, Cone
10	413620	Bearing, Cup
11	413687	Bearing, Cone
12	617285	Seal
13	400301	End Cap
14	438225	Bolt
15	400300	Plug
16	4003VB	Bushing
17	2003PR	Plug, Vent
18	200300	Plug
19	H130-9	130 Degree Gearbox Complete

DRIVE LINE ASSEMBLY

WARNING **For Illustration Purposes Only. Never operate the driveline/ auger system unless all guards and shields are properly installed.**

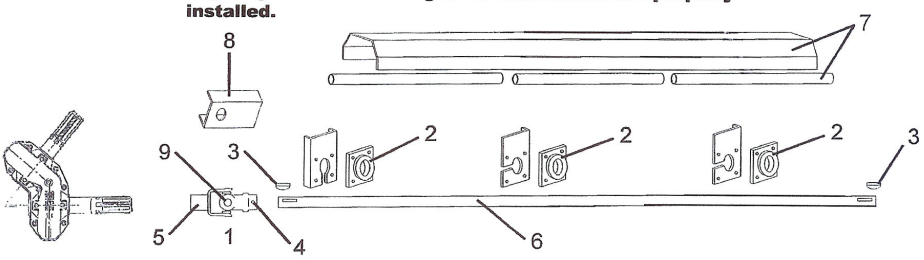

#	Part #	Description
1	252288	U-Joint (drive shaft to gearbox)
2	UCF-20928	1 3/4" Flange Bearing, 4 hole
3	38112	3/8" x 1 1/2" Half Moon Key
4	SS-3812	3/8" x 1/2" Set Screw
5	SS-1212	1/2"-20 x 1/2" Set Screw
6	DS-134150	Drive Shaft, 1 3/4" x 150"
7	GDS-134150	Guard for Drive Shaft (incl. plastic shield)
8	3S-DUJ	Shield over U-joint
9	CK-44R	Cross Kit (U-joint) 44R

UPPER AND LOWER AUGER ASSEMBLY

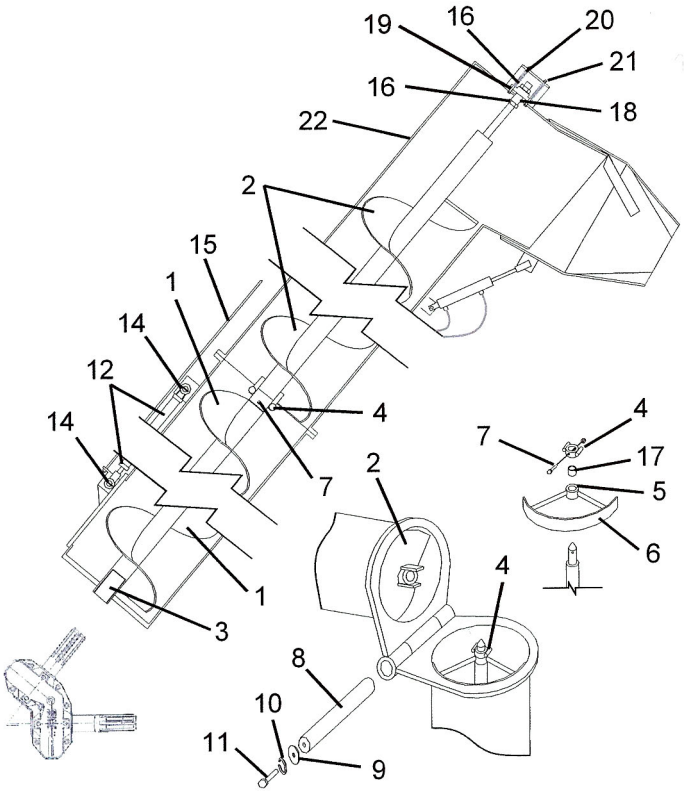

#	Part #	Description
1	LF-18GS	Lower Flighting welded to 4 1/2" pipe x 147 1/2"
2	UF-18GS	Upper Flighting welded to 4 1/2" pipe x 120 3/4"
3	SC-25X3	Spline Coupler 2 1/2"OD x 3"
4	DDW-21218	Drive Dog Weldment, 2 1/2"ID
5	1610BL	Grease Zerk
6	HBA-18	Hanger Bushing Assembly
7	16HBN	1" x 6" Bolt (G8) w/Lock Nut
8	134-P18	1 3/4" x 17 1/2" Pin
9	12-W	1/2"ID Large Washer
10	LW-12	1/2" Lock Washer
11	12114HB	1/2" x 1 1/4" Hex Bolt
12	JD236	2" x 36" Hydraulic Cylinder
13	JD472	Seal Kit for 2" x 36" Hyd. Cyl.
14	ICR4	1" x 4" Pin
15	GI-12-6B	1/2" Gate Indicator Rod (bent)
16	HN-114	1 1/4" Hex Nut
17	BB-212	2 1/2" Bronze Bushing
18	112S	1 1/2" Long Spacer
19	GRAF-206	4 Hole Flange Bearing
20	CMSUAA-4	Compression Spring
21	MB-126	1/2" x 5 1/2" Hex Bolt w/Nut
22	UAH-18	Upper Auger Tube Assembly
00	JM0054509	Lower Auger Liner 18" x 116"

HYDRAULIC CYLINDER ASSEMBLY
(To Raise and Lower the Upper Auger)

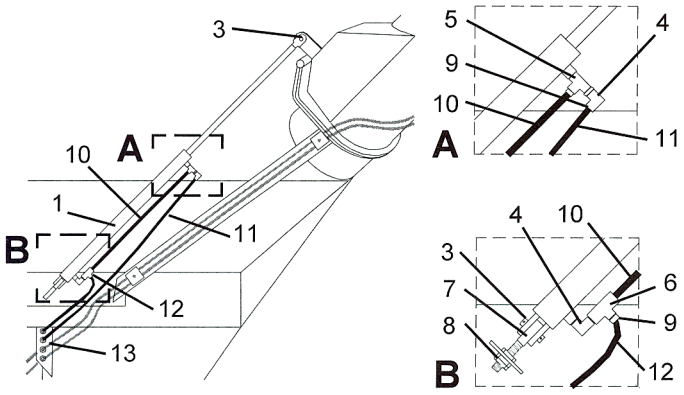

#	Part #	Description
1	JD25024	2 1/2" x 24" Hydraulic Cylinder
2	JD469	Seal Kit for 2 1/2" x 24" Hydraulic Cylinder
3	ICR4	1" x 4" Pin with Hair Pin
4	38SE90	3/8" Street Elbow 90
5	5602-6-6	3/8" Street Tee
6	PC-37	Pilot Check Valve
7	BJW-114	Ball Joint Weldment with 1 1/4" Hex Nuts
8	HN-114	1 1/4" Hex Jam Nut
9	1404-062	Orifice Restrictor (.062) for 2 1/2" x 24" Hydraulic Cylinder
10	HH-1421	1/4" x 21" Hydraulic Hose
11	HH-14160	1/4" x 160" Hydraulic Hose
12	HH-14144	1/4" x 144" Hydraulic Hose
13	RG-1	Rubber Grommet (26012)

BOLT ON HITCH ASSEMBLY

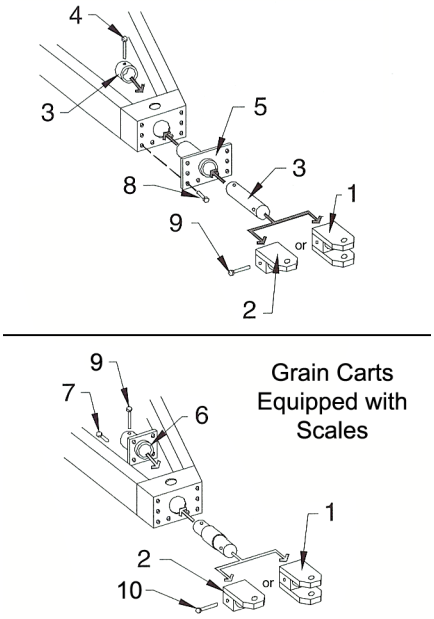

#	Part #	Description
1	SHW-112N	Swivel Hitch Weldment (less pin and collar) Clevis Type (2 1/2"ID)
1	SHW-278	Swivel Hitch Weldment (less pin and collar) Clevis Type (2 7/8"ID) for scales
2	SHW-112SN	Swivel Hitch Weldment (less pin and collar) Spade Type (2 1/2"ID)
2	SHW-278S	Swivel Hitch Weldment (less pin and collar) Spade Type (2 7/8"ID) for scales
3	212PC	2 1/2" x 13 1/4" Shaft w/collar
4	1412BN	1" x 4 1/4" Gr 5 HHMB w/nut
5	HSPS-1	Hitch Spool Plate Support w/bolts
6	WBW-278	Weigh Bar Weldment
7	343BWN	3/4" x 3" Bolt (G8) w/Heavy Lock Washer and Nut
8	343HB	3/4" x 3" Hex Bolt (G8)
9	1512BN	1" x 5 1/2" Bolt (G5) w/nut
10	16BN	1" x 6" Bolt (Gr 5) with nut

HYDRAULIC DRIVEN FLOW CONTROL SPOUT

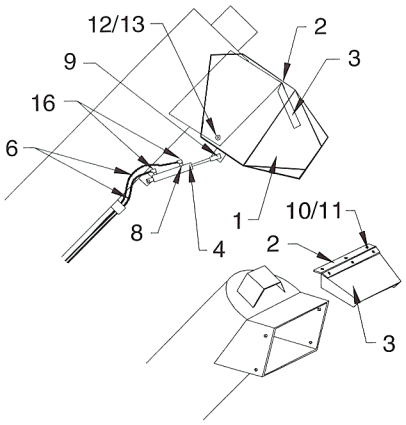

#	Part #	Description
1	FSH-18	Flow Control Spout Housing
2	HP-18	Hinge
3	BP-18	Baffle Plate
4	HC-FCS	Hyd. Cylinder with clevis end and 1/2"-20 regular nut
5	SKHC-FCS	Seal Kit for Hydraulic Cylinder
6	HH-1428	1/4" x 28' Hydraulic Hose
7	PQC-1	Pioneer Quick Coupler
8	SR-14	1/4" Swivel Restricter
9	CP-12112	1/2" x 1 1/2" Clevis Pin with Cotter Pin
10	1434-HHMB	1/4" x 3/4" Bolt
11	LN-14	1/4" lock Nut
12	122-HHMB	1/2" x 2" Grade 5 Bolt
13	HN-12	1/2" Lock Nut
14	STS-1L	Self Tapping Screw
15	RCH-1	Retaining Clip for Hose
16	14STEL	1/4" St. Elbow

GRAIN CART ASSEMBLY

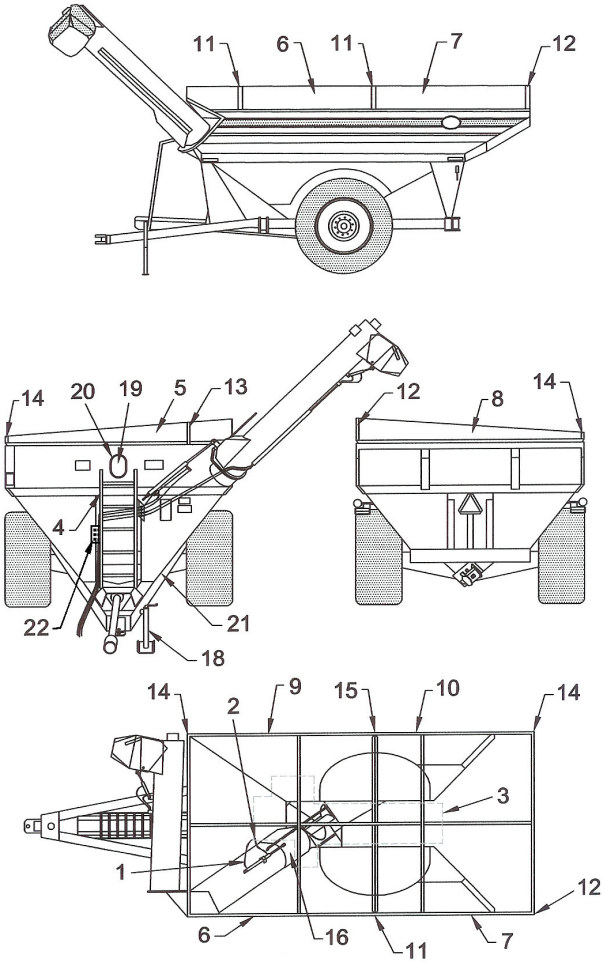

#	Part #	Description
1	HH-1441	1/4" x 41" Hydraulic Hose
2	HHC-14	1/4" Hydraulic Hose Coupler
3	SG-105018S	Grate
4	LA-1050	Ladder Assembly
5	TTE-1050F	Extension
6	TTE-1050HSF	Extension (High Side Front)
7	TTE-1050HSR	Extension (High Side Rear)
8	TTE-1050R	Extension (Rear)
9	TTE-1050LSF	Extension (Low Side Front)
10	TTE-1050LSR	Extension (Low Side Rear)
11	TTE-1050HSSP	Splice Plate (High Side)
12	TTE-1050HSC	Corner (High Side)
13	TTE-1050FSP	Splice Plate (Front)
14	TTE-1050LSC	Corner (Low Side)
15	TTE-1050LSSP	Splice Plate (Low Side)
16	AGC-105018	Auger Gate Cover
17	TTE-1050	Extensions (Set) Complete
18	TWL-200	Jack Stand Assy w/ 5/8" pin
19	PGW-71212	Plexiglass Window
20	62095-7	Window Molding
21	CODW-105018	Clean-out Door and Wheel Assembly
22	HHB-1C	Hose Holder Bracket

GRAIN CART LIGHT KIT

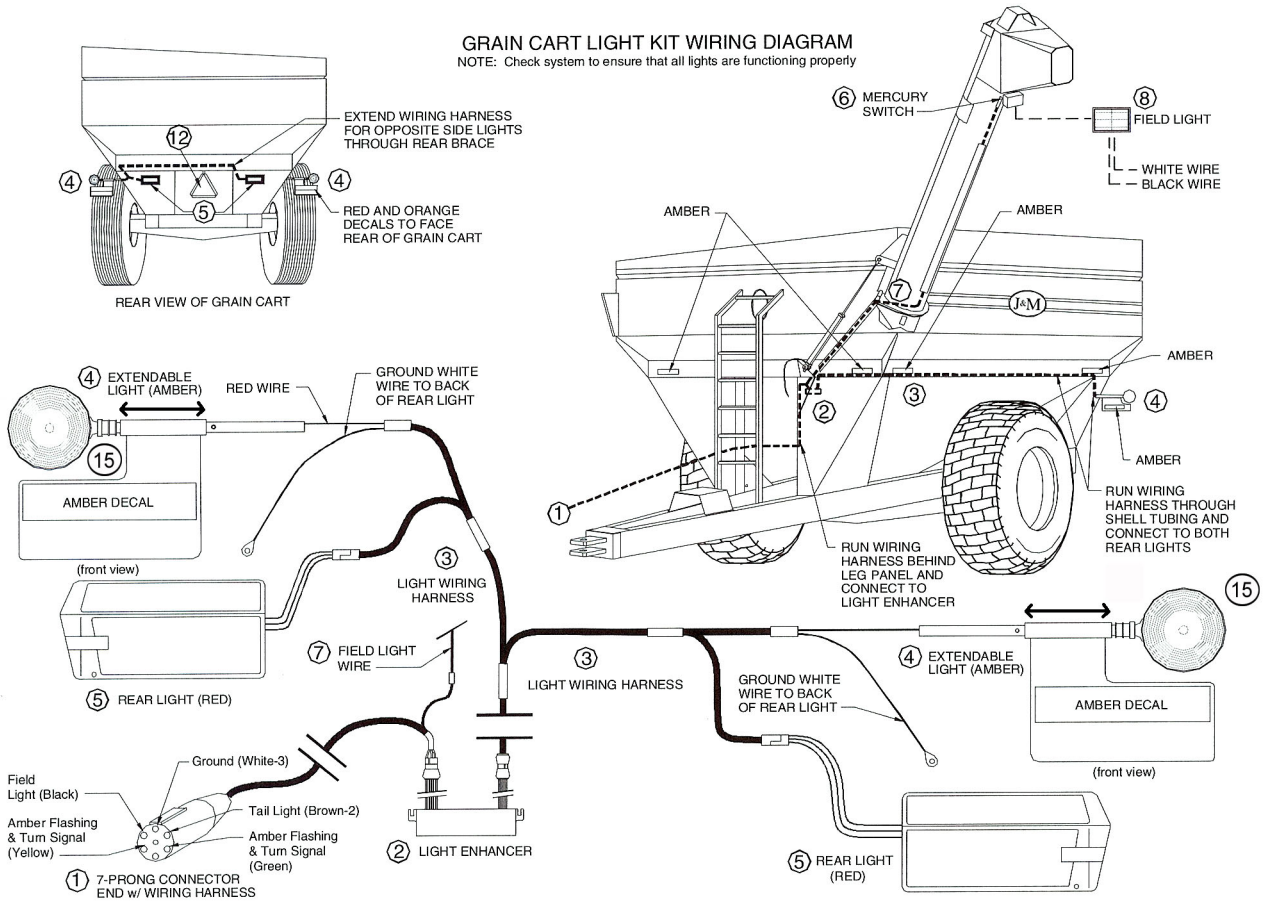

#	Part #	Description
1	8WH-7PC	Main Wiring Harness with 7-Prong Connector End
2	LE-1B	Light Enhancer
3	WH-1	Wiring Harness (Rear Half)
4	EL-A1	Extendable Amber Light Assembly (Left/Right)
5	RL-R1L	Rear Red Light, Left
5	RL-R1R	Rear Red Light, Right
6	MS-1	Mercury Switch
7	FLW-1	Field Light Wire
8	FLDLT-1	Field Light
9	RD-1A	Reflective Amber Decal
10	RD-1R	Reflective Red Decal
11	RD-1O	Reflective Orange Decal
12	SMV-1	Slow Moving Vehicle Emblem
13	GR-1	Rubber Grommet
14	7-WCE	7-Prong Connector End
15	AL-1	Amber Light Only
16	RL-1A	Replacement Lens (Rd Amber)
16	RL-1LH	Replacement Lens (L/H Red Rectangular)
16	RL-1RH	Replacement Lens (R/H Red Rectangular)

WEIGH SCALE RETROFIT KIT

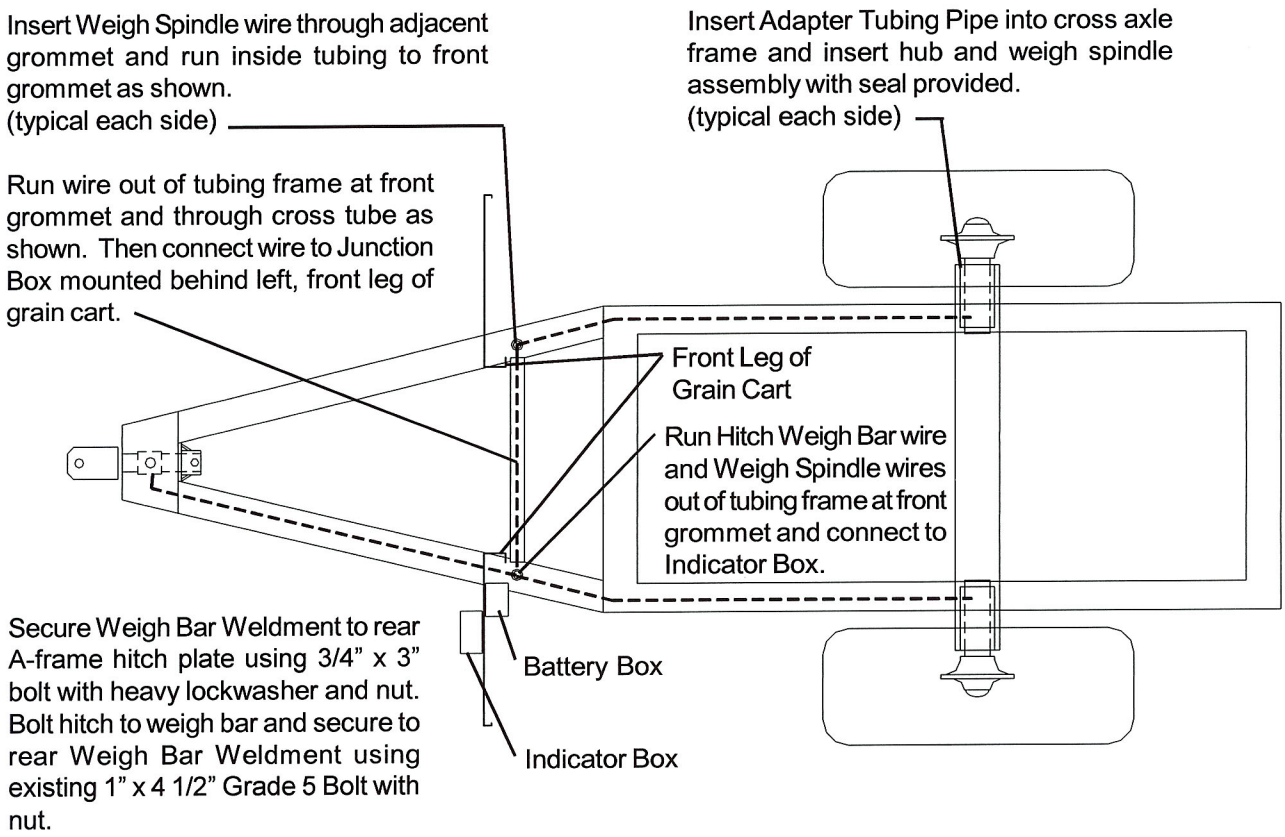

Weigh Scale Retrofit Parts List (Weigh Tronix)

#	W/T Part #	Description	W/T Qty
1	55WS	Rear Weigh spindle with cable	2
2	278WS	Front Hitch Weigh Bar with cable	1
3	615 915	Indicator Box with mounting plate	1
5	PC-2	Power Cord (to battery)	1
8	ATP-55	Adapter Tubing Pipe	2
9	MBI-2	Mounting Bracket for Indicator	1
10	WBW-278	Weigh Bar Weldment	1
11	BB-2	Battery Box with strap	1
12	343-BWN	3/4" x 3" Bolt (G8) w/ hvy lock washer, nut	4
14	MB-381	3/8" x 1" Bolt with nut	4
16	MB-1434	1/4" x 3/4" Bolt with nut	4

NOTE:
When inserting both the weigh spindles or the hitch weigh bar, be sure that the TOP of the spindle is in the upright position as indicated by the decal on each weigh bar.

Failure to correctly align the weigh bar and spindles in the upright position will cause the scale system to read with greater inaccuracy.

ELECTRONIC WEIGH SCALE SYSTEMS
(FOR GRAIN CARTS EQUIPPED WITH TRACKS)

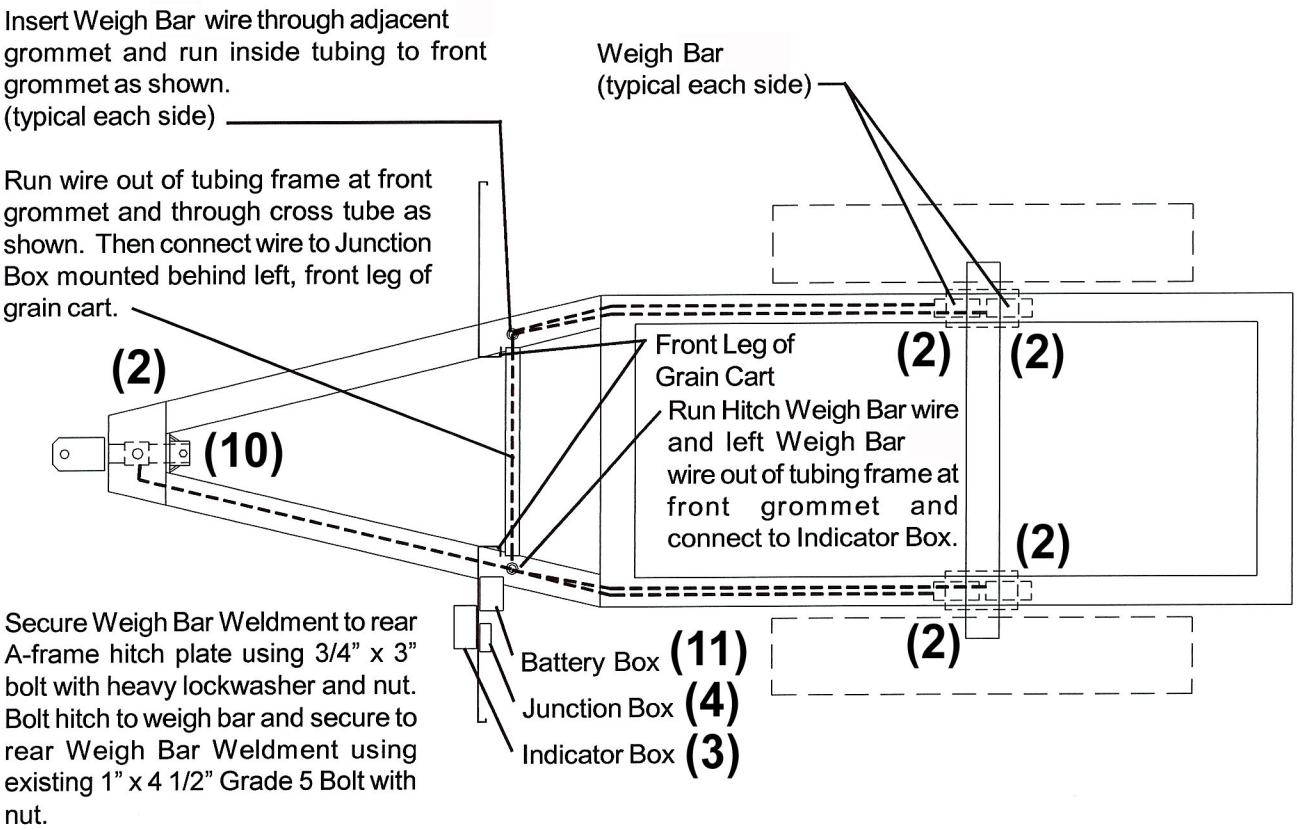

Scale System Parts List (for Digi-Star Systems Only)

#	D/S Part #	Description	D/S Qty
1	-------	----------	---
2	250WB	Weigh Bar with Cable	5
3	EZ-2000	Indicator Box with mounting plate	1
4	JB-2	Junction Box (5 pt.) for Tracks	1
5	PC-1	Power Cord (to battery)	1
6	ECI-1	Extension Cord (to mount in tractor cab)	1
7	37605SA	Seal (Hub)	2
8	-------	----------	---
9	MBI-1	Mounting Bracket for Indicator	1
10	WBW-1	Weigh Bar Weldment	1
11	BB-2	Battery Box with strap	1
12	343-BWN	3/4" x 3" Bolt (G8) w/ hvy lock washer, nut	4
13	MB-58612	5/8" x 6 1/2" Bolt (G5) with nut	4
14	MB-381	3/8" x 1" Bolt with nut	6
15	PB-10	#10 Pan Bolt with nut	4

NOTE:
When inserting both the weigh spindles or the hitch weigh bar, be sure that the TOP of the spindle is in the upright position as indicated by the decal on each weigh bar.

Failure to correctly align the weigh bar and spindles in the upright position will cause the scale system to read with greater inaccuracy.

WEIGH SCALE RETROFIT KIT
(Continued)

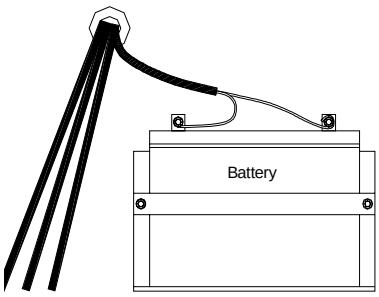

MOUNTING THE BATTERY BOX

On the rear side of the front, left leg of the grain cart (the leg below the auger hinge), position the Battery Box below and to the right of the grommet as shown.

Using the Battery Box as a template, mark and drill two 3/8" holes. Secure the Battery Box to the grain cart leg using two 3/8" x 1" flange bolts and nuts provided. Attach the end plate to the battery box using two 3/8" x 1" flange bolts and nuts.

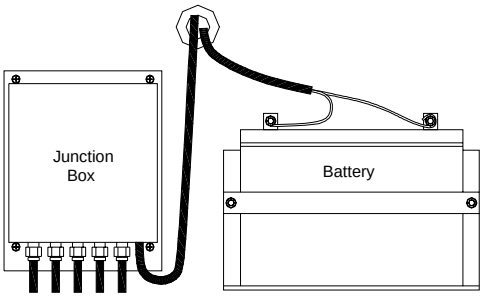

MOUNTING THE JUNCTION BOX
(for Digi-Star Systems Only)

On the inside face of the front, left leg ot the grain cart (the leg below the auger hinge), position the Junction Box below and to the left of the grommet as shown.

Using the Junction Box as a template, mark and drill four holes for the #10 pan bolts. Secure the Junction Box to the grain cart leg using the #10 pan bolts and nuts provided.

The junction box is used for Digi-Star Weigh Systems only. Connect the cords from the weigh spindles and weigh bar into any of the ports on the Junction Box. Match and attach the colored wires to the color coordinated post.

If a Weigh-Tronix System is used, the cords from both weigh spindles and weigh bar connect directly into the bottom face of the Indicator Box, therefore no Junction Box is required. (See the Weigh-Tronix Indicator Box below.)

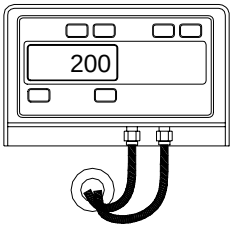

Digi-Star's Indicator Box has one port for the Power Cord and one port for the Junction Box.

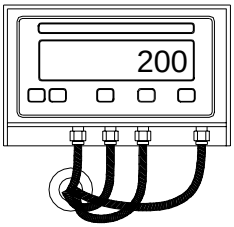

Because Weigh-Tronix does not use a Junction Box, there are three ports on the Indicator Box where each of the weigh cords connect directly, plus a port for the Power Cord.

MOUNTING THE INDICATOR BOX

On the outside face of the front, left leg of the grain cart (the leg below the auger hinge), position the Indicator Box Mounting Plate above the grommet so the Indicator Box is positioned as shown. Mark and drill two 3/8" holes and secure the Digi-Star mounting plate using two 3/8" x 1" Flange Bolts and Nuts.

To secure the Weigh-Tronix mounting plate, mark and drill four 1/4" holes and secure using four 1/4" x 3/4" bolts and nuts.

To secure the Indicator Box to the mounting plate, simply slide the Indicator Box over the mounting plate as necessary.

CONNECTING THE POWER CORD

To connect the Power Cord to the Indicator Box, attach the screw plug end of the Power Cord into the power port of the Indicator Box. To connect to the battery, secure the Red Wire of the Power Cord to the Positive Terminal of the battery and the Black Wire to the Negative Terminal. Be sure any additional wires provided by the Power Cord are properly stored and secured.

Grain Cart Roll Tarp Parts List and Set Up Instructions

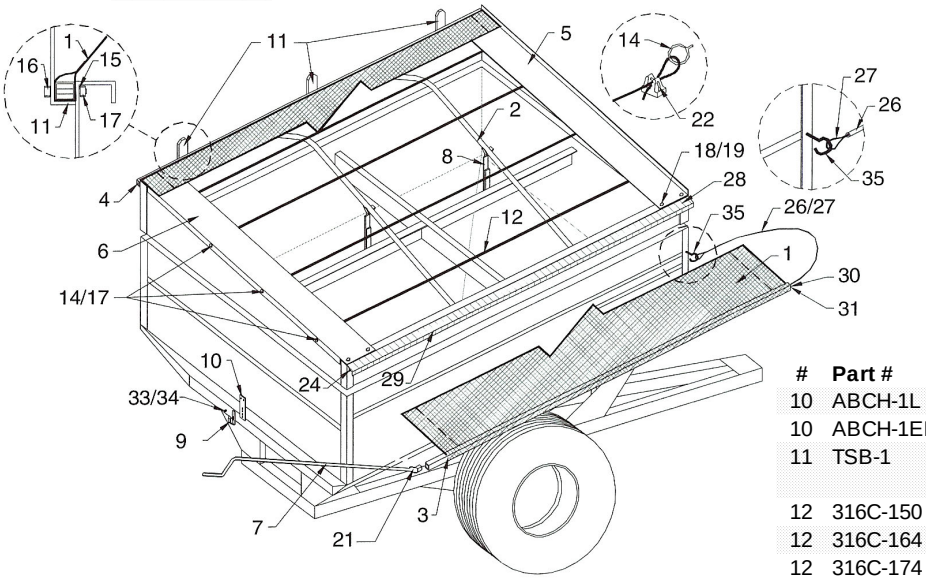

For Grain Cart Models:

525-14W
620-14
750-14, 750-16, 750-18
875-16, 875-18
1050-18, 1050-22
1075-18, 1075-22

PARTS LIST

#	Part #	Description	Qty
1	525CT	Tarp w/ Rivets (525)	1
1	620T	Tarp w/ Rivets (620)	1
1	750CT	Tarp w/ Rivets (750)	1
1	875T	Tarp w/ Rivets (875)	1
1	1050T	Tarp w/ Rivets (1050)	1
1	1075T-1822	Tarp w/ Rivets (1075)	1
2	116TB	Bows for Tarp (525)	2
2	137TB	Bows for Tarp (620)	2
		Bows for Tarp (750, 875)	3
		Bows for Tarp (1050) (1050TB)	5
2	134TB	Bows for Tarp (1075)	4
3	150RT	1 1/4" Square Roll Tube (525)	1
3	164RT	1 1/4" Square Roll Tube (620)	1
3	174RT	1 1/4" Square Roll Tube (750)	1
3	198RT	1 1/4" Square Roll Tube (875)	1
3	230RT	1 1/4" Square Roll Tube (1075)	1
3	1050RT	1 1/4" Square Roll Tube (1050) - 270"L	1
4	144TT	1" Square Tiedown Tube (525)	1
4	158TT	1" Square Tiedown Tube (620)	1
4	168TT	1" Square Tiedown Tube (750)	1
4	192TT	1" Square Tiedown Tube (875)	1
4	224TT	1" Square Tiedown Tube (1075)	1
4	1050TT	1" Square Tiedown Tube (1050) - 264"L	1
5	119FP	Front End Panel (525)	1
5	14012FP	Front End Panel (620, 750, 875, 1050)	1
5	137FP	Front End Panel (1075)	1
6	119RP	Rear End Panel (525)	1
6	14012RP	Rear End Panel (620, 750, 875, 1050)	1
6	137RP	Rear End Panel (1075)	1
7	CUJ-1N	Crank with Splined U-Joint (525)	1
7	CUJ-1LN	Crank with Splined U-Joint (620, 750, 875) L	1
7	CUJ-1EL	Crank with Splined U-Joint (1075, 1050) X-L	1
8	ABS-2	Adjustable Bow Supports (525)	2
		Adjustable Bow Supports (750, 875)	3
8	ABS-2L	Adjustable Bow Supports (620) L	2
		Adjustable Bow Supports (1075) L	4
		Adjustable Bow Supports (1050) R	5
9	CH-1N	Crank Holder	1
10	ABCH-1	Adj. Bar for Crank Holder (525)	1
10	ABCH-1L	Adj. Bar for Crank Holder (620, 750, 875)	1
10	ABCH-1EL	Adj. Bar for Crank Holder (1075, 1050)	1
11	TSB-1	Tarp Stop Bracket w/Sleeve (525 thru 1075)	3
		Tarp Stop Bracket w/Sleeve (1050)	4
12	316C-150	3/16" Cable (525)	4
12	316C-164	3/16" Cable (620)	4
12	316C-174	3/16" Cable (750)	4
12	316C-198	3/16" Cable (875)	4
12	316C-1050	3/16" Cable (1050) - 270"L	4
12	316C-240	3/16" Cable (1075)	4
13	381-HB	3/8" x 1" Hex Bolt (525, 620)	10
		3/8" x 1" Hex Bolt (750, 875)	14
		3/8" x 1" Hex Bolt (1075)	18
		3/8" x 1" Hex Bolt (1050)	22
14	384JB	3/8" J-Bolt	8
15	38-FW	3/8" Flat Washer (all carts except 1050)	3
		3/8" Flat Washer (1050)	4
16	382-HB	3/8" x 2" Hex Bolt (all carts except 1050)	4
		3/8" x 2" Hex Bolt (1050)	5
17	HLN-38	3/8" Hex Lock Nut (525, 620)	22
		3/8" Hex Lock Nut (750, 875)	26
		3/8" Hex Lock Nut (1075)	30
		3/8" Hex Lock Nut (1050)	34
18	1434-HHMB	1/4" x 3/4" Hex Bolt (525, 620)	16
		1/4" x 3/4" Hex Bolt (750, 875)	20
		1/4" x 3/4" Hex Bolt (1075)	24
		1/4" x 3/4" Hex Bolt (1050)	28
19	HLN-14	1/4" Hex Lock Nut (525, 620)	17
		1/4" Hex Lock Nut (750, 875)	21
		1/4" Hex Lock Nut (1075)	25
		1/4" Hex Lock Nut (1050)	29
21	14212-HB	1/4" x 2 1/2" Hex Bolt	1
22	316CC	3/16" Cable Clamp	8
24	381-SB	3/8" x 1" Stove Bolt (525, 750, 875)	2
		3/8" x 1" Stove Bolt (620)	6
		3/8" x 1" Stove Bolt (1075, 1050)	4
25	PT-129	1/2" Plastic Tube x 141" (525)	1
25	PT-150	1/2" Plastic Tube x 160" (620 thru 1075)	1
27	BC-156	3/8" Bungee Cord x 150" (525)	1
27	BC-180	3/8" Bungee Cord x 170" (620 thru 1075)	1
28	TL-144	Tightening Lip x 144" (525)	1
28	TL-158	Tightening Lip x 158" (620)	1
28	TL-168	Tightening Lip x 168" (750)	1
28	TL-192	Tightening Lip x 192" (875)	1
28	TL-264	Tightening Lip x 264" (1050) (2 pcs L/R)	1
30	SPG-1	Square Plastic Grommet	1
31	14STS	1/4" Self Tapping Screw	1
32	BCC-1	Bungee Cord Clip	4
33	12114HB	1/2" x 1 1/4" Hex Bolt	1
34	12LN	1/2" Lock Nut	1
35	516EB	5/16" Eyebolt with Nut	1

Installing the Tightening Lip, Bows and End Panels

1 Place Tightening Lip on top of low side of grain tank and clamp ends with a vise grips. (NOTE: Grain Cart models 750-18, 1075-18 and 1075-22 have the Tightening Lips built into the grain cart extension. For these model carts, this step can be ignored.)

Position the Front End Panel (with wind lip) over the front end of the tapered top extensions of the grain cart. Align and drill 1/4" holes through the top two pre-drilled holes on each end of the front panel and attach using 1/4" x 3/4" hex bolts and 1/4" lock nuts. Repeat to mount the Rear End Panel to the rear rear tapered top extension of the grain cart.

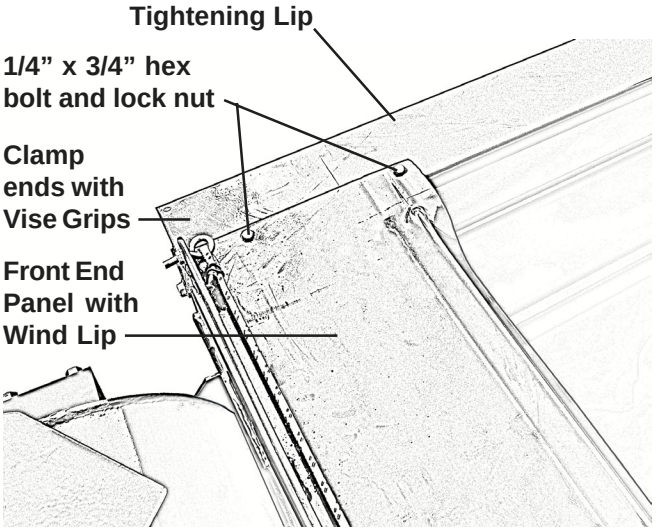

2 Place the Bows between the sides of the grain cart tank. Align the pre-punched holes in the Bows with the pre-punched holes in the Tightening Lip and side extension. Attach the Bows using 1/4" x 3/4" hex bolts and 1/4" hex lock nuts.

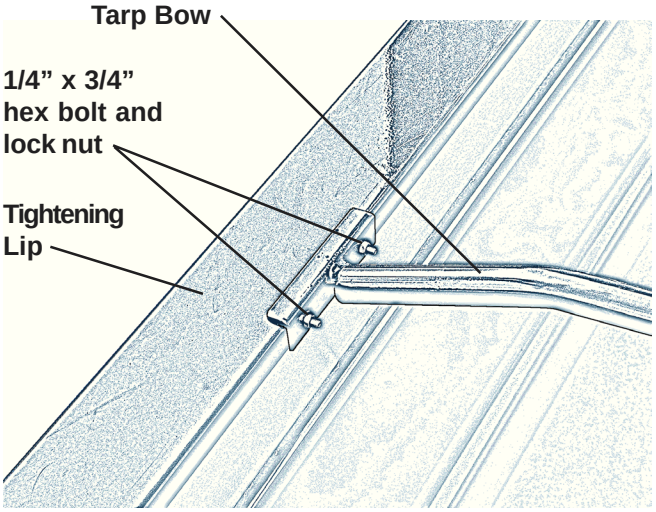

3 Position the Bow Supports under the Bows. Attach the Bow Supports to the steel cross members of the grain cart by drilling a 3/8" holes in the cross member and securing with 3/8" x 1" bolt and 3/8" lock nut. Adjust the height of the Bow Support so the top of the support cradles the Bow. Secure the top and bottom of the Bow Supports using a 3/8" x 1" bolt and 3/8" lock nut.

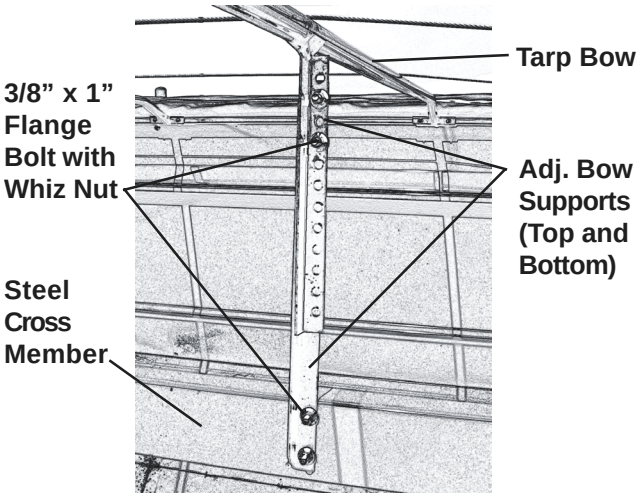

Mounting the Center Cable Supports

4 Locate the pre-punched holes in the End Panels and drill 3/8" holes through the grain tank extensions. Attach one 3/8" J-Bolt to the inside of the End Panel using one 3/8" hex lock nuts.

Lay the cables over the Tarp Bows. Thread the cable end through the small hole on the edge of the End Panel and attach the cable to the J-Bolt using one 3/16" cable clamp. Adjust the tension on the cable so the tarp will not sag.

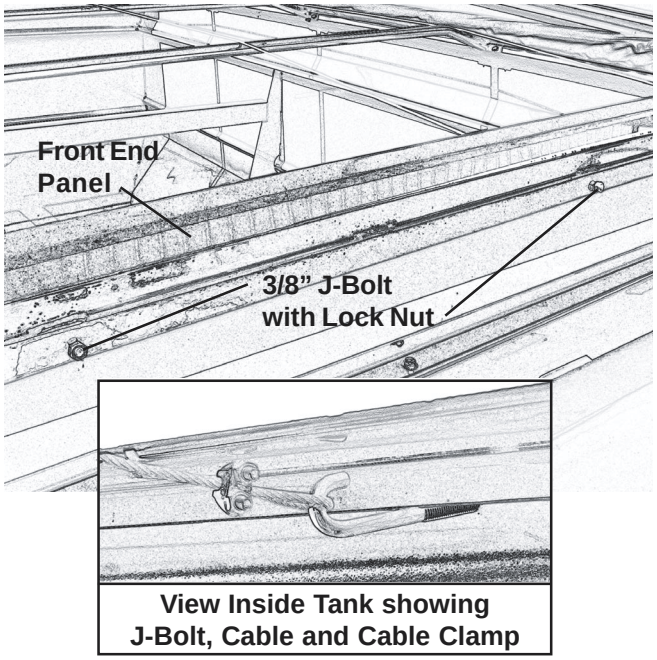

View Inside Tank showing J-Bolt, Cable and Cable Clamp

Mounting the Tarp

5 Lay the tarp out flat (dull side up). Insert the 1" Square Tie-Down Tube into the 3" end loop of the tarp until the Tie-Down Tube is extended two inches beyond the edge of the tarp.

Insert the 1 1/4" Square Roll Tube into the 3 1/2" end loop of the tarp. The Roll Tube should be extended 1/2" from the edge of the front of the tarp and extend 8" past the rear of the tarp.

Place the tarp with the tubes onto the grain cart and align. The 1" Square Tie-Down Tube should be located on the high side of the grain cart tapered top extensions and the 1 1/4" Square Roll Tube should be located on the low side of the grain cart tapered top extensions.

Two Tarp Stop Brackets should be placed approximately 24" in from the end of the tarp. Drill a 3/8" hole through the tarp, 1" Square Tie-Down Tube and the grain cart high tapered top extension. Bolt the Tarp Stop Bracket, 1" Square Tie-Down Tube and Roll Tarp to the high side extension using one 3/8" x 2" hex bolts, one 3/8" flat washers and one 3/8" lock nut. Center a third Tarp Stop Bracket between the two end tarp stops and secure in the same procedure.

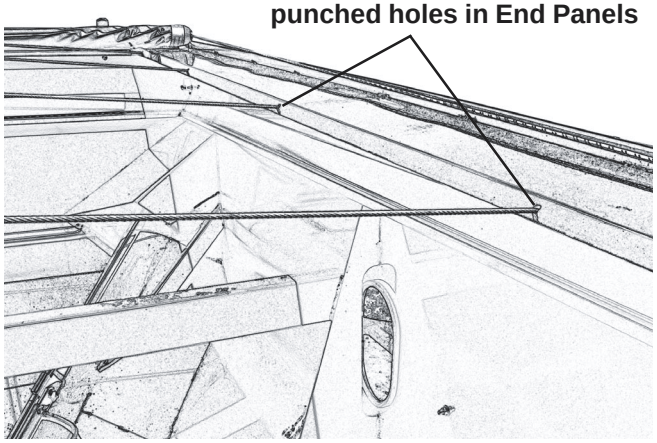

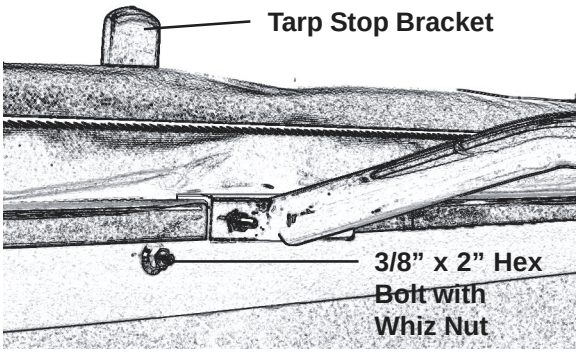

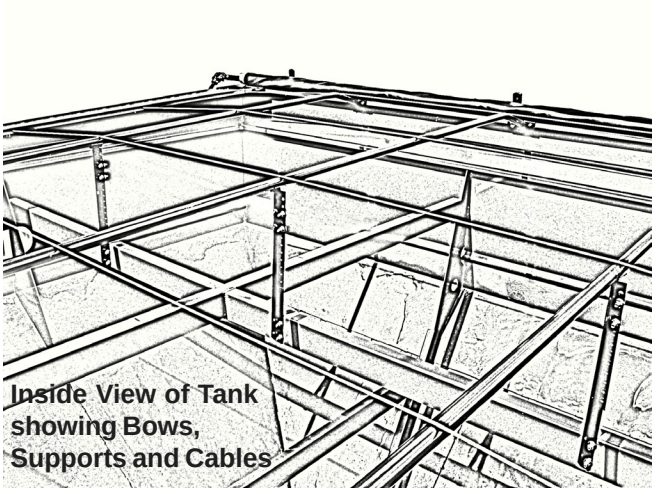

Attaching the Rivets

6 After the tarp is in place, drill 1/4" holes through the tarp and the outside wall of the Roll Tube at each seam and in the front and rear hems. Keep the holes 1" to 1 1/2" from the end of the tarp to allow space for the Square Plastic Grommet. Drive the 1/4" rivets into the roll tube until it is flush with the cap.

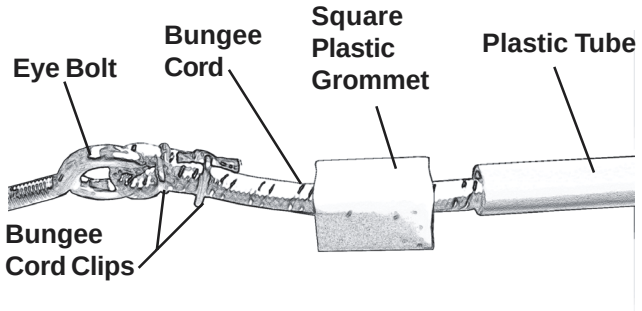

Attaching the Bungee Cord

7 Roll the tarp into the covered position. Slide the Bungee Cord through the 1/2" Plastic Tube. Fold and clamp the end of Bungee Cord so the cord cannot slip through the plastic tube. Slide the Plastic Tube (clamped end first) into the 1 1/4" Roll Tube end that is 1/2" from the end of the tarp. Slip the Square Plastic Grommet with the chamfer end facing out onto the Bungee Cord and drive the plastic grommet into the 1 1/4" Roll Tube. Secure the Square Plastic Grommet to the 1 1/4" Square Roll Tube by drilling a 1/4" self-tapping screw through the Roll Tube and into the Square Plastic Grommet. Attach the 5/16" Eyebolt into the wind lip on the tightening lip side. NOTE: If a hole is not pre-punched into the wind lip, drill a 5/16" hole in the vertical wind lip of the Front End Cap approximately 1" from the end.

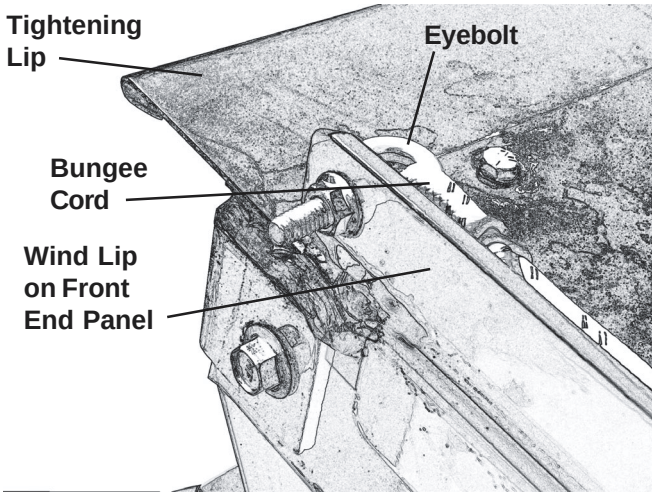

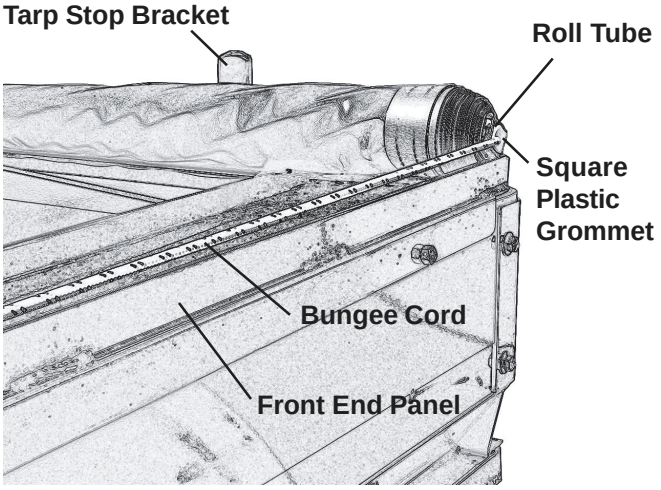

Mounting the Crank

8 Attach the Crank to the Universal Joint using 1/4" x 2 1/2" hex bolt and 1/4" lock nut. Attach the Univeral Joint to the 1 1/4" Roll Tube using one 3/8" x 2" bolt and 3/8" lock nut. Drill 3/8" holes into the center of the grain cart tank rear end and attach the Crank Holder Adjustable Bar using 3/8" x 1" hex bolts and 3/8" lock nuts. Attach the Crank Holder to the Adjustable Bar using 1/2" x 1 1/4" hex bolts and lock nuts. Tighten the bolt but allow the Crank Holder to swing free on the adjustable bar.

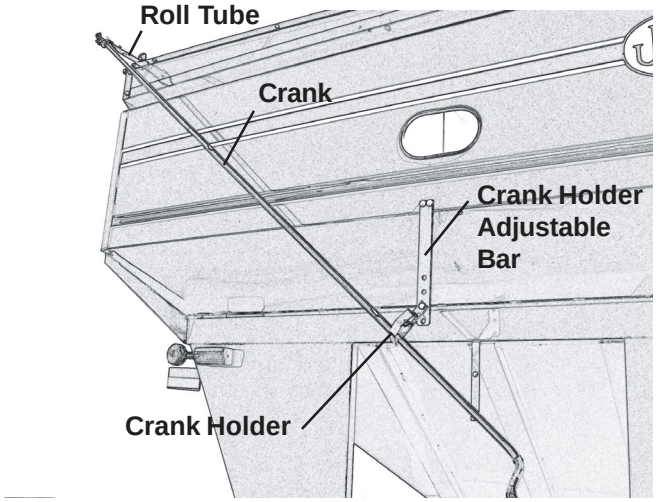

SERVICE / MAINTENANCE RECORD

DATE	DESCRIPTION	NOTES